제 2013 - 69187 호

안 전 인 증 서

(사업장명) 극동호이스트(주)

(소 재 지) (425-833)경기도 안산시 성곡동630-2 반월공단 B-607-14

위 사업장에서 제조하는 아래의 품목이 산업안전보건법 제34조 및 같은 법 시행규칙 제58조의4제4항에 따른 안전인증 심사 결과 안전·보건기준에 적합하므로 안전인증표시의 사용을 인증합니다.

품 목

호이스트

형식,모델(용량,등급)/인증번호

KDC2-L (2.0Ton) /13-AQ2AC-03902

인 증 기 준

고용노동부 고시 제2012 - 33호 (위험기계,기구 의무안전인증 고시)

인 증 조 건

2013년 08월 27일

한국산업안전보건공단이사장

심 사 결 과 통 지 서

신청인	사 업 장 명	극동호이스트(주)	사업장관리번호 (사업자등록번호)	134-81-013350 134-81-01335
	소 재 지	(425 - 833) 경기도 안산시 성곡동630-2 반월공단 B-607-14		
	대표자 성명	최성찬		
안전인증대상 기계 · 기구명		호이스트		
형 식 (규 격)		KDC2-L	용 량 (등 급)	2.0 Ton
인 증 심 사 원		조성준 변명수		조성준

산업안전보건법 제 34조 및 같은 법 시행규칙 제58조의4에 따라 실시한 서면심사 결과가 적합 함을 통지합니다.

2011 년 06 월 14 일

한국산업안전보건공단 경기서부지도원장

불법복제 및 배포금지

서 면 심 사 서 류

형식 번호 : KDC2 - L

극 동 호 이 스 트 (주)

工場 : 경기도 안산시 단원구 성곡동 630-2 반월공단607-14

電話 : 031) 491 - 5311

FAX : 031) 494 - 5315

192.168.11.155 / 2011-06-17 15:51:30

동 일 형 식 일 람 표

사업장명	극동호이스트㈜	개정일자 및 번호			인증번호	
형식 및 모델		동일 형식 인정범위 및 내역				비 고
형식	모델	권상속도(m/min)	횡행속도(m/min)	양정(m)	횡행방식	
KDC2-L	KDC2-L6-L	10/1.0 m/min	고속 : 24M/MIN 저속 : 16M/MIN	6	모터구동식	
	KDC2-L9-L		고속 : 24/12M/MIN 저속 : 16/ 8M/MIN	9		

불법복제 및 배포금지

192.168.11.155 / 2011-06-17 15:51:30

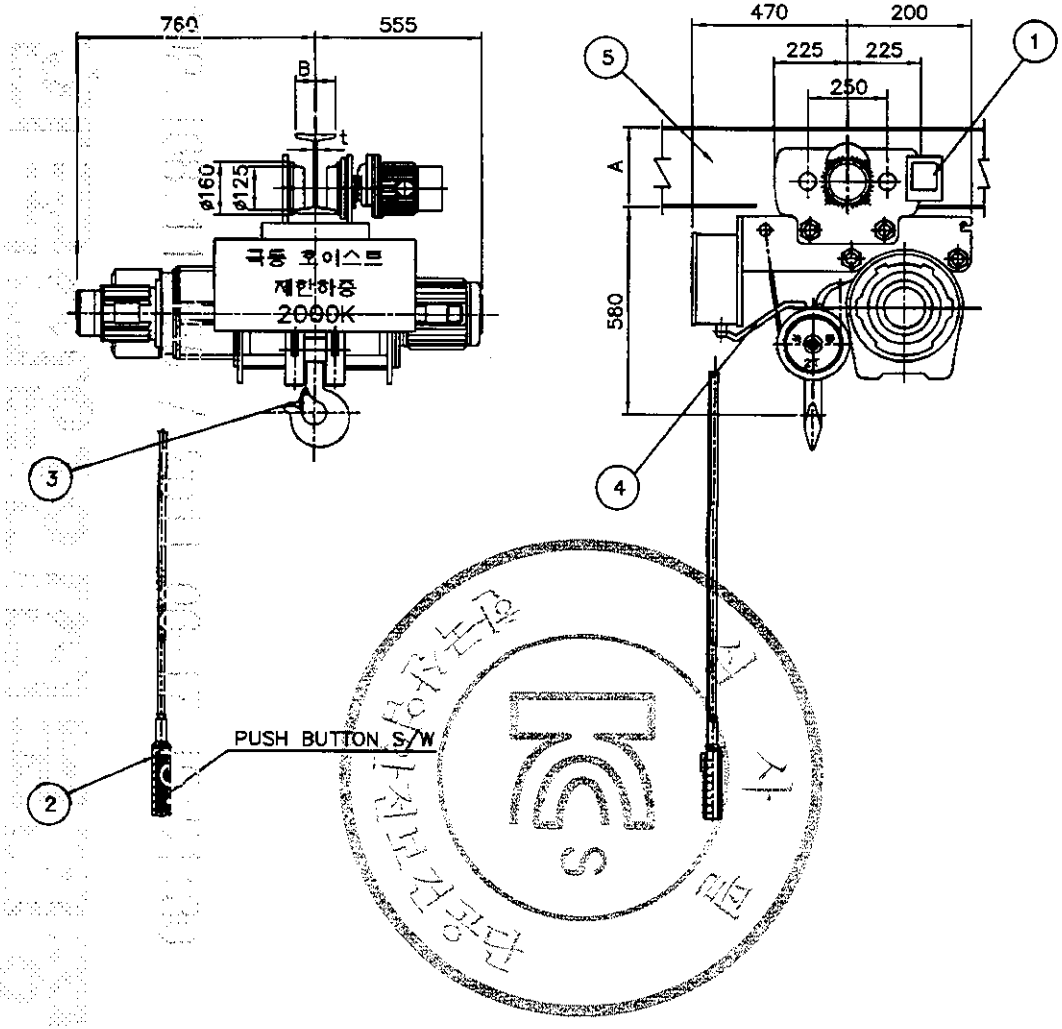

SPECIFICATION			
RATED LOAD			2000 KG
TESTING LOAD			2500 KG
LIFT			6 M
RATING			30 MIN
HOISTING	SPEED		10/1.0 M/MIN
	MOTOR		3.7/0.4 KW x 4 P
TRAVERSING	HIGH	SPEED	24 M/MIN
		MOTOR	0.75 KW x 4 P
	LOW	SPEED	16 M/MIN
		MOTOR	0.5 KW x 6 P
	DUAL HIGH	SPEED	24 / 12 M/MIN
		MOTOR	0.8/0.4 KW x 4/8 P
	DUAL LOW	SPEED	16 / 8 M/MIN
		MOTOR	0.5/0.25 KW x 6/12 P
WIRE ROPE			(6x19) ø8 x 4 FALLS
POWER SOURCE			AC3ø 220V(380,440,460,480) 60Hz
COLOR			10 B 3/5
WEIGHT			440 KG

NO.	DESCRIPTIONS	MT'L	SET QTY	SET QTY	UNIT WEIGHT KG.	TOTAL WEIGHT KG.	REAMERKS
5	I-BEAM	SS400		-			TABLE 참조
4	UPPER LIMIT S/W	SS400		1			
3	SAFETY LATCH	SPC		1			
2	EMERGENCY S/W	—		1			
1	LOAD LIMITER	—		1			

PROJECT				DATE 19 . . .
TITLE	KDC2 – L6 – L ARRANGEMENT DRAWING FOR HOIST			SCALE A3/ 20 /
DRAWN	DESIGNED	CHECKED	APPROVED	REF DRAWING
KD 극동호이스트 주식회사 KUK DONG HOIST CO., LTD.			SHEET NO.	DRAWING NO. KDC2L – 600

192.168.11.155 / 2011-06-17 15:51:30

불법복제 및 배포금지

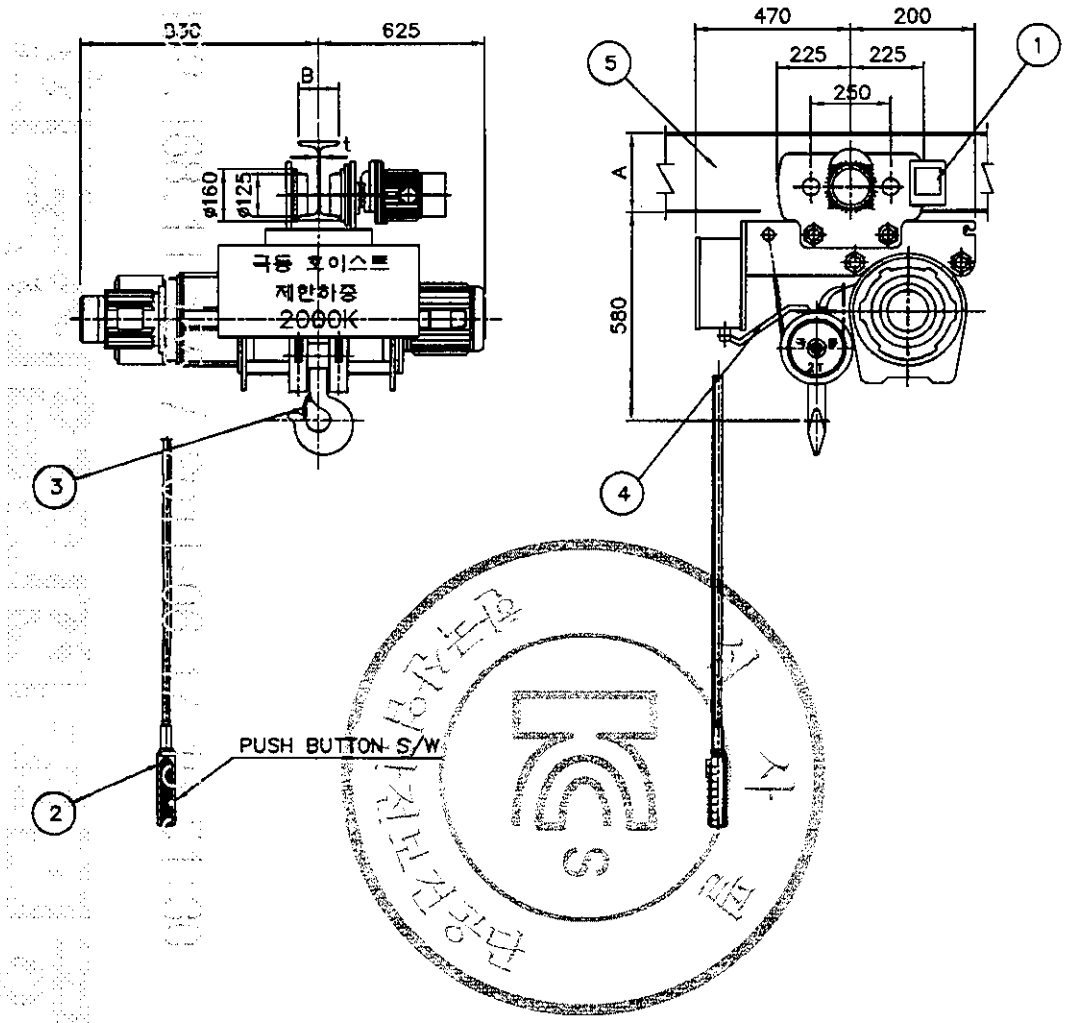

SPECIFICATION				
RATED LOAD			2000	KG
TESTING LOAD			2500	KG
LIFT			9	M
RATING			30	MIN
HOISTING	SPEED		10/1.0	M/MIN
	MOTOR		3.7/0.4 KW x 4 P	
TRAVERSING	HIGH	SPEED	24	M/MIN
		MOTOR	0.75 KW x 4 P	
	LOW	SPEED	16	M/MIN
		MOTOR	0.5 KW x 6 P	
	DUAL HIGH	SPEED	24 / 12	M/MIN
		MOTOR	0.8/0.4 KW x 4/8 P	
	DUAL LOW	SPEED	16 / 8	M/MIN
		MOTOR	0.5/0.25 KW x 6/12P	
WIRE ROPE			(6x19) ø8 x 4 FALLS	
POWER SOURCE			AC3ø 220V(380,440,460,480) 60Hz	
COLOR			10 B 3/5	
WEIGHT			490 KG	

NO.	DESCRIPTIONS	MT'L	SET QT'Y	SET QT'Y	UNIT WEIGHT KG.	TOTAL WEIGHT KG.	REAMERKS
5	I-BEAM	SS400		-			TABLE 참조
4	UPPER LIMIT S/W	SS400		1			
3	SAFETY LATCH	SPC		1			
2	EMERGENCY S/W	—		1			
1	LOAD LIMITER	—		1			

PROJECT				DATE 19 . . .
TITLE	KDC2 - L9 - L ARRANGEMENT DRAWING FOR HOIST			SCALE A3 / 20 /
DRAWN	DESIGNED	CHECKED	APPROVED	REF DRAWING

국동호이스트 주식회사 KUK DONG HOIST CO., LTD.	SHEET NO.	DRAWING NO. KDC2L - 900

192.168.11.155 / 2011-06-17 15:51:30

192.168.11.155 / 2011-06-17 15:51:30

불법복제 및 배포금지

ADR'S NO.

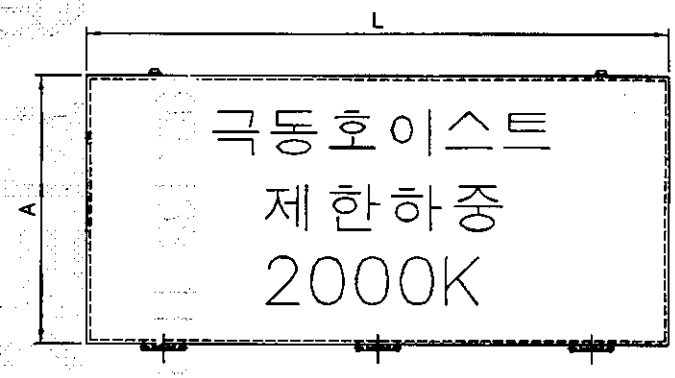

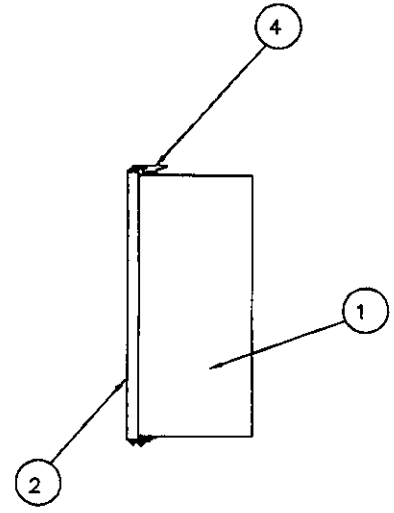

NO	DESCRIPTION	MT'L	REMARKS
1	PANEL CASE	SPC	2.3t
2	PANEL COVER	SPC	2.3t
3	HINGE	PUR'	
4	CLAMP	PUR'	
5	SPONGE	PUR'	

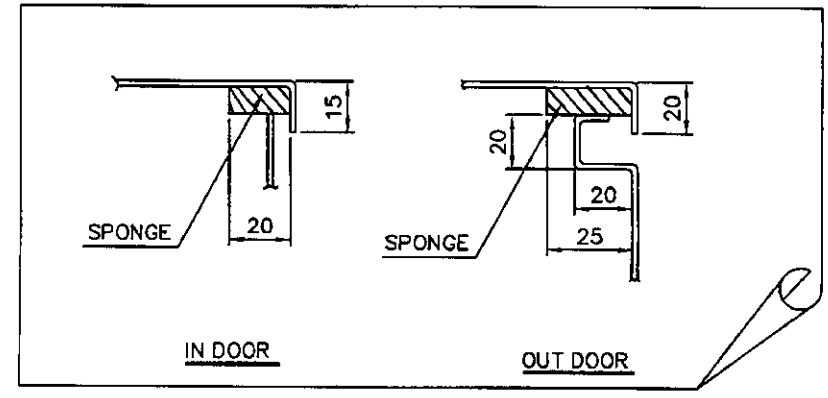

SELECTION	HOIST CAPACITY	DESCRIPTION	IN DOOR			OUT DOOR			REMARK
			A	B	L	A	B	L	
	C 2 TON	CREEP	360	170	790	360	170	790	
		T/S	240	150	350	240	150	350	

NOTE

1.PROTECTION DEGREE ;

A, INDOOR TYPE : DUST PROOF

B, OUT DOOR TYPE : SPLASH PROOF

2.FINAL PAINTING COLOR (MUNSELL NO.)

A. IN SIDE : 10B 3/5

B. OUT SIDE : 10B 3/5

3.PAINTING THICKNESS : ABOVE 40 um

4.APPLICATION VOLTAGE : 220V,380V,440V,460V,480V

5.제어용 전선 : 2.5sq KIV,HIV

6. 외함 개방 구조는 다음과 같다.

1) 외함 개방시 충전부분이 차단되도록 한다.

2) 외함 개방 후 충전되어있는 부분은 IP2X 이상의 직접 접촉 방호가 되어있을것.

MK	DATE	REVISIONS	CHK.	APP.

CUSTOMER		DRAWING	DESIGN	CHECKED	APPROVED	SCALE	DATE	ORDER NO.
DRAWING TITLE	CREEP HOISTING CONTROL BOX					NONE		
	LAY-OUT	극동호이스트 주식회사 KUK DONG HOIST CO., LTD.				DWG. NO	KDC2EBO	

1	2	3	4	5	6	7	8	9	10	11	12	13	14	15	16	17	18	19	20

POWER CIRCUIT

TRAVELLING POWER SUPPLY SYSTEM

ADR'S NO. A1

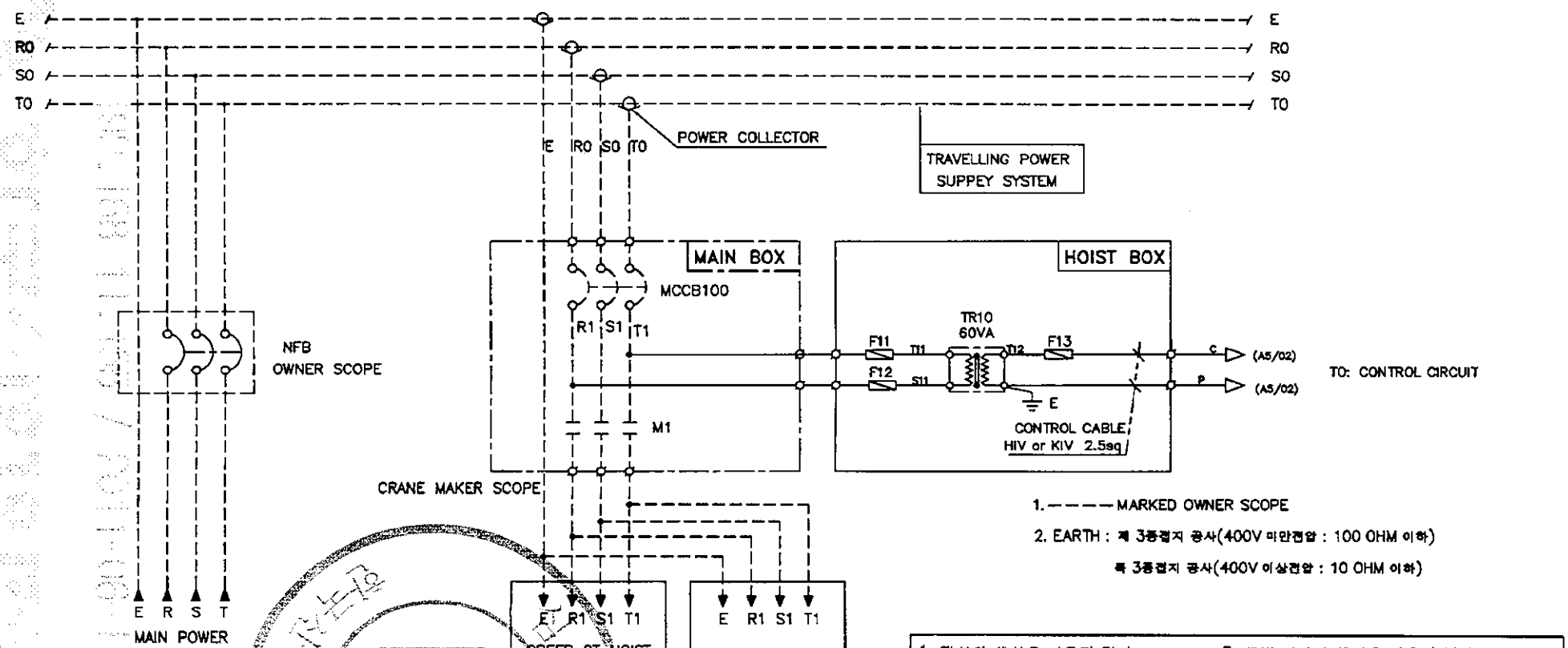

1. ———— MARKED OWNER SCOPE
2. EARTH : 제 3종접지 공사(400V 미만전압 : 100 OHM 이하)
특 3종접지 공사(400V 이상전압 : 10 OHM 이하)

SELECTION	VOLTAGE	F11 F12	F13	MCCB100
	220V	2A	3A	33AF/30AT
	380V	1A	3A	33AF/15AT
	440V	1A	3A	33AF/15AT
	460V	1A	3A	33AF/15AT
	480V	1A	3A	33AF/15AT

1. 전선의 색상은 다음과 같다.
   1) 흑 색 : 전원선
   2) 적 색 : 교류제어선
   3) 청 색 : 직류제어선
   4) 녹색 또는 녹색과 황색 혼용 : 접지
2. 표시등의 색상은 다음과 같다.
   1) 적 색 : 비상
   2) 황 색 : 비정상
   3) 녹 색 : 정상
   4) 청색 : 외부
   5) 흰색 : 중립
3. 조작 버튼의 색상은 다음과 같다.
   1) 적 색 : 비상
   2) 황 색 : 비정상
   3) 청 색 : 외부
   4) 흰색, 회색 또는 흑색 : 지정된 의미없음

MK	DATE	REVISIONS	CHK.	APP.

CUSTOMER		DRAWING	DESIGN	CHECKED	APPROVED	SCALE	DATE	ORDER NO.
DRAWING TITLE	MAIN POWER CIRCUIT 1 DIAGRAM					NONE		
		극동호이스트 주식회사 KUK DONG HOIST CO., LTD.				DWG. NO	KDC2E001	

192.168.11.155 / 2011-06-17 15:51:30

불법복제 및 배포금지

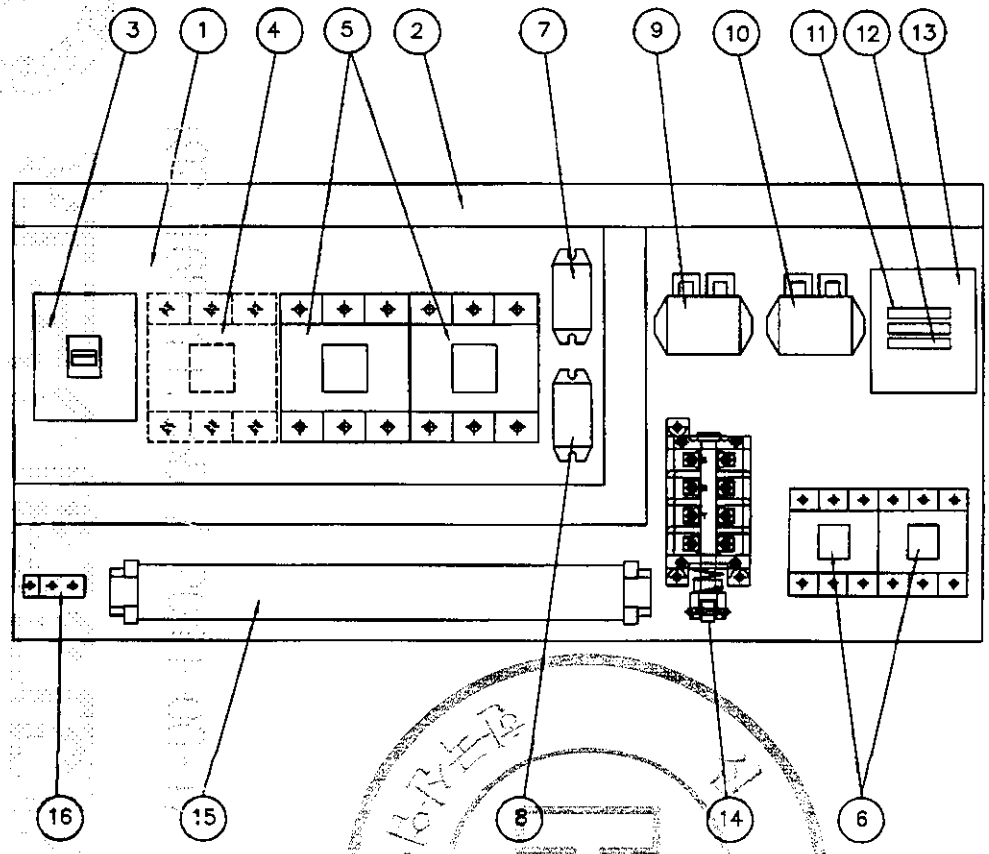

NO	DESCRIPTION	SPECIFICATION	Q'TY	REMARK
1	CHASSIS PLATE		1	아 연 도 금
2	CABLE DUCT	–	1	
3	N.F.B	33AF/30AT	1	HOISTING
4	MAGNET CONTACTOR	DOC–32P	1	MAIN MAG.
5	MAGNET CONTACTOR	DOC–40P	2	HOISTING
6	MAGNET CONTACTOR	DOC–22P	2	CREEP HOIST
7	SILICON RECTIFIER	SR–30	1	HOISTING
8	SILICON RECTIFIER	SR–30	1	CREEP HOIST
9	E.O.C.R	SS–30	1	HOISTING
10	E.O.C.R	SS–05	1	CREEP HOIST
11	FUSE	2 A	2	
12	FUSE	3 A	1	
13	TRANSFORMER	220V/110V(120V), 100VA	1	
14	UPPER LIMITER	AC 600V, 75A	1	LS–1,2
15	TERMINAL BLOCK	60A,15A		
16	EARTH TERMINAL	3tx20x50	1	

NOTE

1. UPPER LIMIT LS–1,LS–2의 접점 허용 전류 용량 : AC 600V, 75A
2. POWER SOURCE : AC. 3φ 220V 60HZ
3. EARTH TERMINAL RESISTANCE : 0.018Ω

NOTE

1. 전선의 색상은 다음과 같다.
   1) 흑색 : 고류 및 직류 전원선로
   2) 적색 : 고류제어선
   3) 주황색 : 외부 전원에서 공급되는 연동장치 제어회로
   4) 녹색 또는 녹색과 황색 혼용 : 접지선
2. CABLE MATERIAL : KIV OR EQUIVALENT
   MIN SIZE : 2.5sq
3. 제어용 전선 : 2.5mm KIV,HIV
4. 제작시 다소 변경 될수있음.
5. 외함 개방구조는 다음과 같을것.
   1) 외함 개방시 충전부분이 차단되도록 할것.
   2) 외함 개방후 충전되어있는 부분은 IP2X 이상의 직접 접촉 방호가 되어있을것.

MK	DATE	REVISIONS	CHK.	APP.

CUSTOMER		DRAWING	DESIGN	CHECKED	APPROVED	SCALE	DATE	ORDER NO.
DRAWING TITLE	CREEP HOIST CONTROL BOX					NONE		
	ARRANGEMENT DRAWING	KD 국동호이스트 주식회사 KUK DONG HOIST CO., LTD.				DWG. NO	KDC2BA21	

192.168.11.155 / 2011-06-17 15:51:30

불법복제 및 배포금지

192.168.11.155 / 2011-06-17 15:51:30

불법복제 및 배포금지

ADR'S NO.

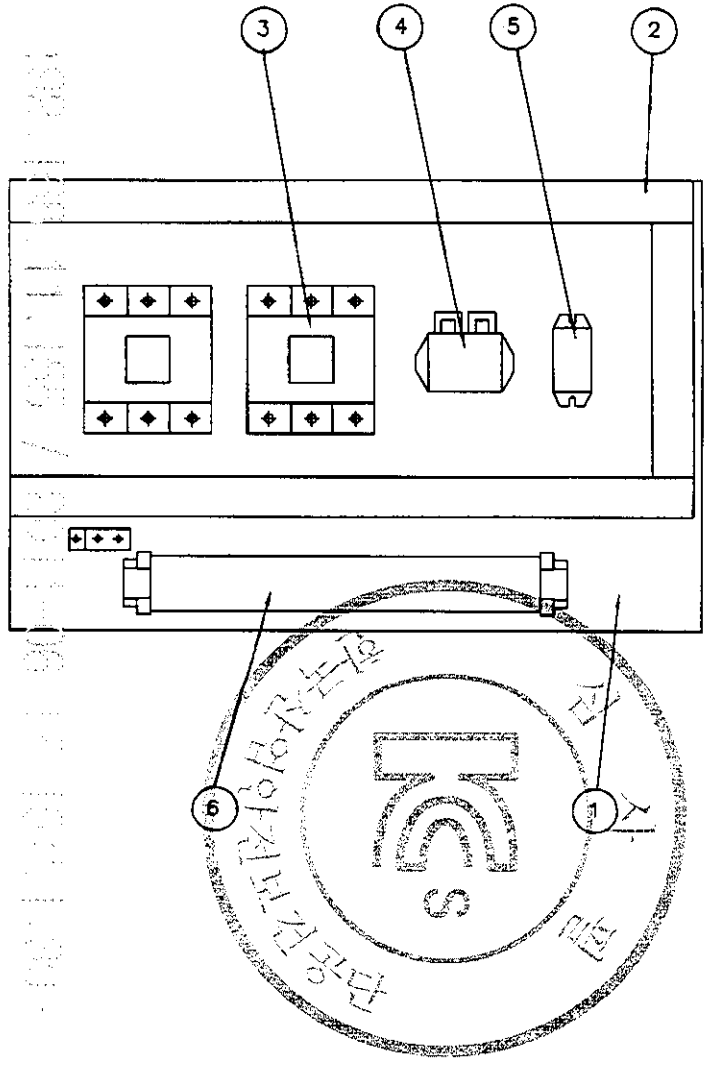

NO	DESCRIPTION	SPEC	Q'TY	REMARK
1	CHASSIS PLATE	–	1	아 연 도 금
2	CABLE DUCT	–	1	
3	MAGNET CONTACTOR	DOC–22P	2	TRAVERSING
4	E.O.C.R	SS–05	1	TRAVERSING
5	SILICON RECTIFIER	SR–30	1	TRAVERSING
6	TERMINAL BLOCK	25A , 15A	1	TRAVERSING

NOTE
1. 전선의 색상은 다음과 같다.
   1) 흑색 : 교류 및 직류 전원선로
   2) 적색 : 교류제어선
   3) 주황색 : 외부 전원에서 공급되는 연동장치 제어회로
   4) 녹색 또는 녹색과 황색 혼용 : 접지선
2. CABLE MATERIAL : KIV OR EQUIVALENT
   MIN SIZE : 2.5sq
3. 제어용 전선 : 2.5mm KIV,HIV
4. 제작시 다소 변경 될수있음.
5. 외함 개방구조는 다음과 같을것.
   1) 외함 개방시 충전부분이 차단되도록 할것.
   2) 외함 개방후 충전되어있는 부분은 IP2X 이상의 직접 접촉 방호가 되어있을것.

MK	DATE	REVISIONS	CHK.	APP.
4				
3				
2				
1				

CUSTOMER	
DRAWING TITLE	TRAVERSING POWER CONTROL BOX ARRANGEMENT DRAWING

DRAWING	DESIGN	CHECKED	APPROVED	SCALE	DATE	ORDER NO.
				NONE		

KD 극동호이스트 주식회사 KUK DONG HOIST CO., LTD.

DWG. NO KDC2bt22

1	2	3	4	5	6	7	8	9	10	11	12	13	14	15	16	17	18	19	20
POWER CIRCUIT																			ADR'S NO.
HOISTING MOTION										CREEP HOIST MOTION									B1

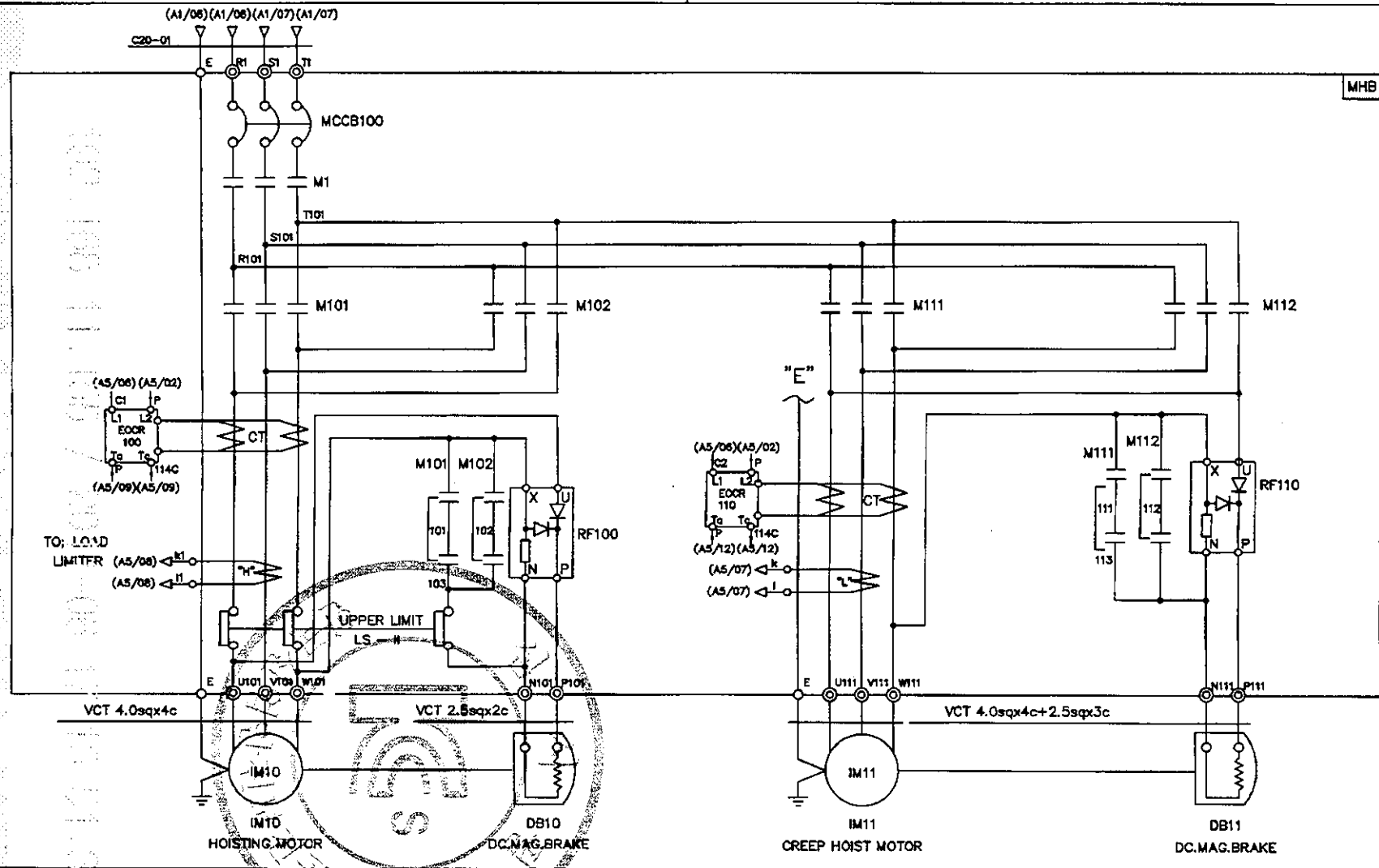

SPECIFICATION / SYMBOLS / DESCRIPTION	HOISTING POWER	HOISTING MOTOR	CREEP MOTOR	DC.MAG BRAKE	NO FUSE BREAKER	TRANSFORMER	FUSE		MAIN MAGNET	MAGNET CONTACTOR		UPPER LIMIT	ELECTRIC OVER CURRENT RELAY		SILICON RECTIFIER		LOAD LIMITER	CABLE
	HOIST	IM 10	IM 11	DB10, 11	MCCB100	TR 1	F11,F12	F13	M1	M101,M102	M111,M112	LS-I, LS-II	EOCR100	EOCR110	RF100	RF110	LOAD LIMITER	C20-01
	2TON AC3PH 220V 60Hz	3.7KWx4P	0.4KWx4P	DC 100V	DBE-33AF/30A	220/110V,120V/100VA	2A	3A	DOC-32P	DOC-40P	DOC-22P	AC 600V 75A	SS-30	SS-05	SR-30	SR-30	JDL-100	VFCT 6.0sqx4c
SELECTION / MAKER	KUK DONG				DAERYUK	SHINHAN	–		DAERYUK			KUK DONG	ASECO				JUNGHO	DONGIL

MK	DATE	REVISIONS	CHK.	APP.
4				
3				
2				
1				

CUSTOMER		DRAWING	DESIGN	CHECKED	APPROVED	SCALE	DATE	ORDER NO.
DRAWING TITLE	CREEP HOISTING POWER & CONTROL					NONE		
	CIRCUIT DIAGRAM	KD 국동호이스트 주식회사 KUK DONG HOIST CO., LTD.				DWG. NO	KDC2E21	

192.168.11.155 / 2011-06-17 15:51:30

홀법복제 및 배포금지

1	2	3	4	5	6	7	8	9	10	11	12	13	14	15	16	17	18	19	20
POWER CIRCUIT																			ADR'S NO.
HOISTING MOTION										CREEP HOIST MOTION									B1

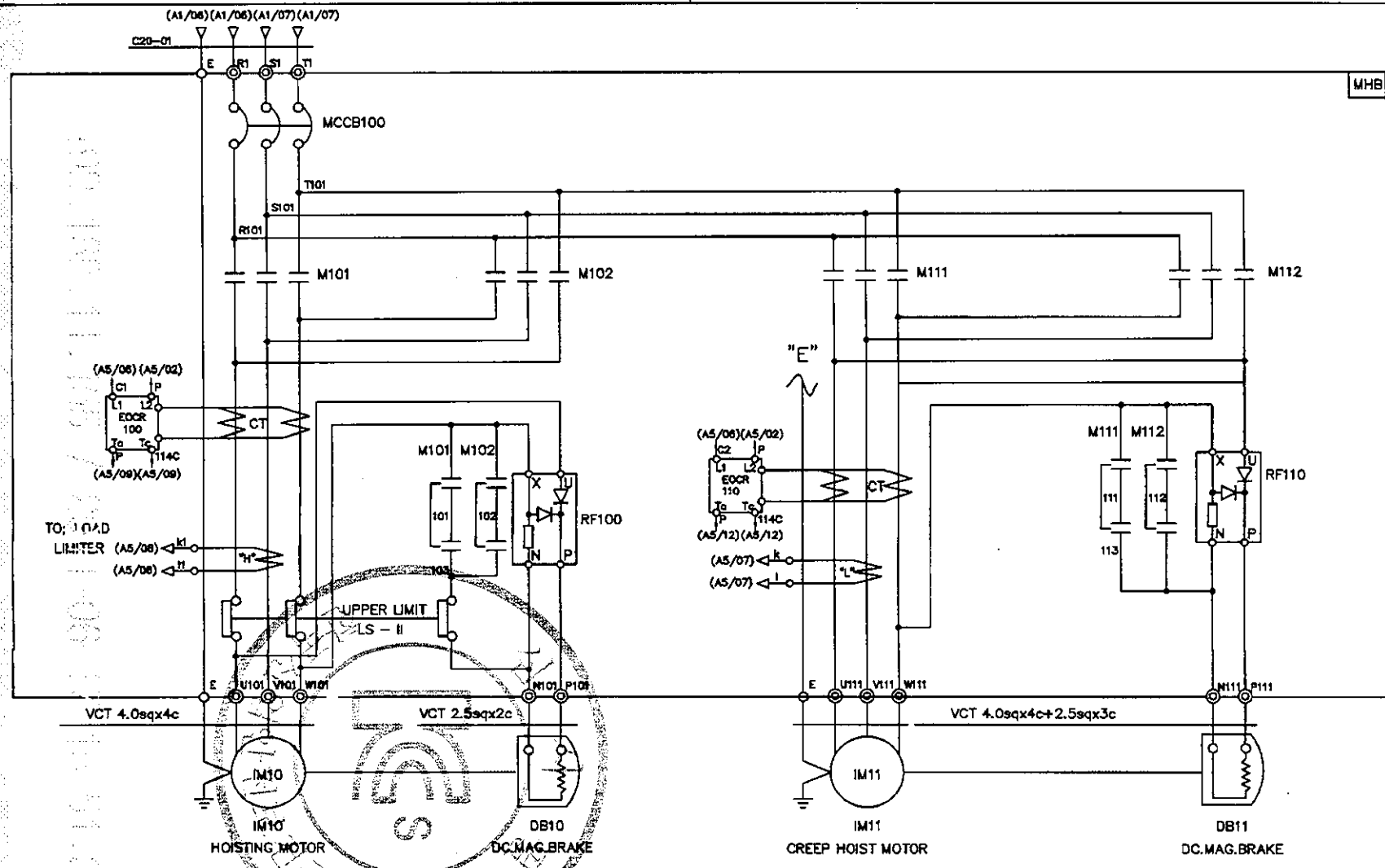

SPECIFICATION / SYMBOLS	HOISTING POWER	HOISTING MOTOR	CREEP MOTOR	DC.MAG BRAKE	NO FUSE BREAKER	TRANSFORMER	FUSE		MAGNET CONTACTOR		UPPER LIMIT	ELECTRIC OVER CURRENT RELAY		SILICON RECTIFIER		LOAD LIMITER	CABLE
DESCRIPTION	HOIST	IM 10	IM 11	DB10, 11	MCCB100	TR 1	F11,F12	F13	M101,M102	M111,M112	LS-I, LS-II	EOCR100	EOCR110	RF100	RF110	LOAD LIMITER	C20-01
	2TON AC3PH 220V 60Hz	3.7KWx4P	0.4KWx4P	DC 100V	DBE-33AF/30A	220/110V,120V/100VA	2A	3A	DOC-40P	DOC-22P	AC 600V 75A	SS-30	SS-05	SR-30	SR-30	JDL-100	VFCT 6.0sqx4c
SELECTION / MAKER	KUKDONG				DAERYUK	SHINHAN	-		DAERYUK		KUK DONG	ASECO				JUNGHO	DONGIL

MK	DATE	REVISIONS	CHK.	APP.
4				
3				
2				
1				

CUSTOMER	
DRAWING TITLE	CREEP HOISTING POWER & CONTROL
	CIRCUIT DIAGRAM

DRAWING	DESIGN	CHECKED	APPROVED	SCALE	DATE	ORDER NO.
				NONE		

KD 극동호이스트 주식회사
KUK DONG HOIST CO., LTD.

DWG. NO KDC2E22

192.168.11.155 / 2011-06-17 15:51:30

본법복제 및 배포금지

1	2	3	4	5	6	7	8	9	10	11	12	13	14	15	16	17	18	19	20
POWER CIRCUIT																			ADR'S NO.
TRAVERSING MOTION																			C1

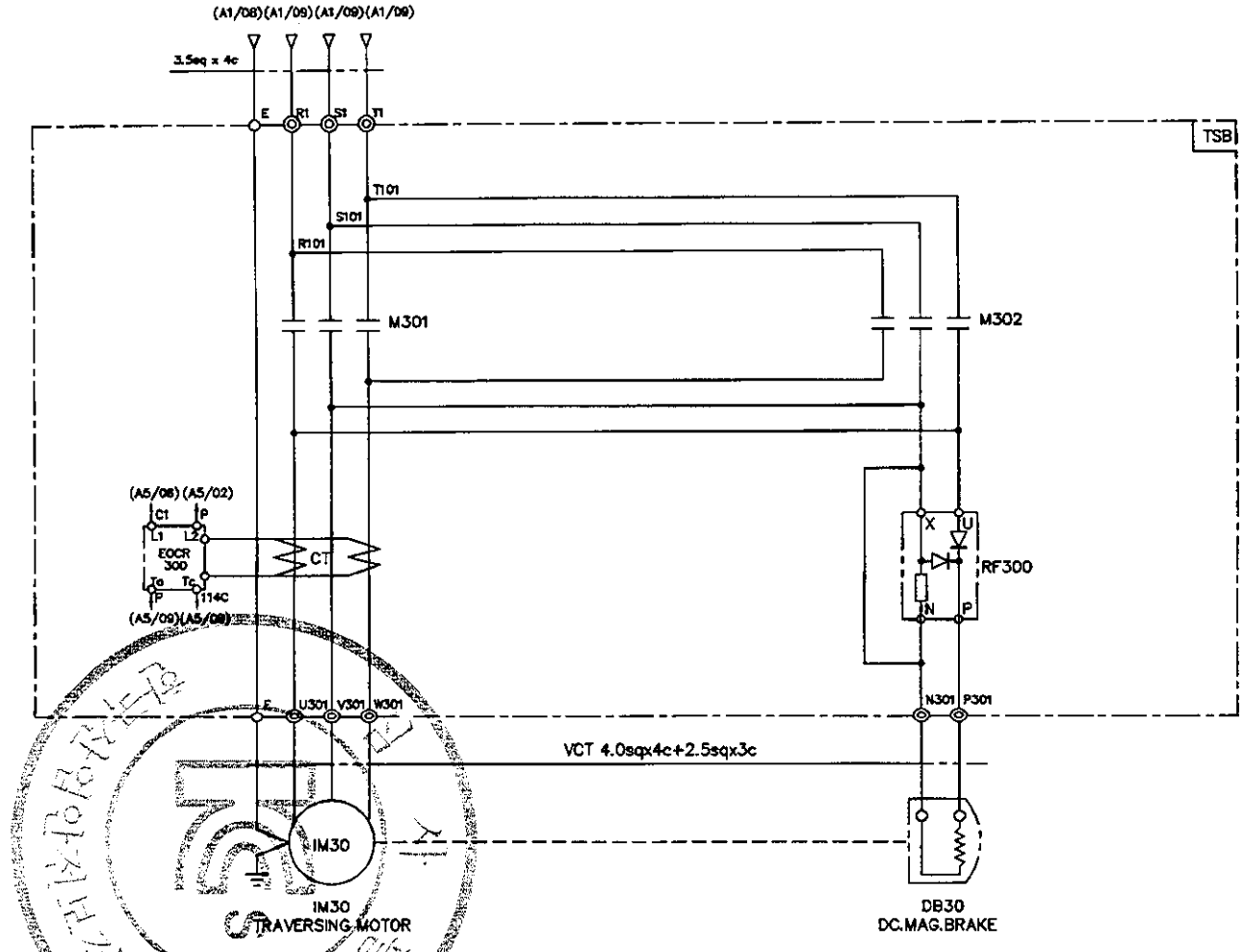

SPECIFICATION / SYMBOLS / DESCRIPTION	TRAVERSING MOTOR	DC MAG' BRAKE	MAGNET CONTACTOR	SILICON RECTIFIER	ELECTRIC OVER CURRENT RELAY	LIMIT SWTCH
	IM 30	DB 30	M301 , M302	RF 300	EOCR 300	LS-301 , LS-302
	0.75KW x 4P AC 3PH 220V 60Hz	DC 100V	DOC-22P AC 110V	SR-30 AC 220V/DC 60V	SS-05	HY - W904
	0.5KW x 6P AC 3PH 220V 60Hz	DC 100V	DOC-22P AC 110V	SR-30 AC 220V/DC 60V	SS-05	HY - W904
SELECTION / MAKER	KUKDONG		DEARYUK	ASECO		

MK	DATE	REVISIONS	CHK.	APP.
4				
3				
2				
1				

CUSTOMER		DRAWING	DESIGN	CHECKED	APPROVED	SCALE	DATE	ORDER NO.
DRAWING TITLE	TRAVERSING POWER CONTROL CIRCUIT DIAGRAM					NONE		
		KD 극동호이스트 주식회사 KUK DONG HOIST CO., LTD.				DWG. NO	KDC2E23	

KDC2E23

192.168.11.155 / 2011-06-17 15:51:30

홀법복제 및 배포금지

1	2	3	4	5	6	7	8	9	10	11	12	13	14	15	16	17	18	19	20

POWER CIRCUIT — ADR'S NO.

TRAVERSING MOTION — C2

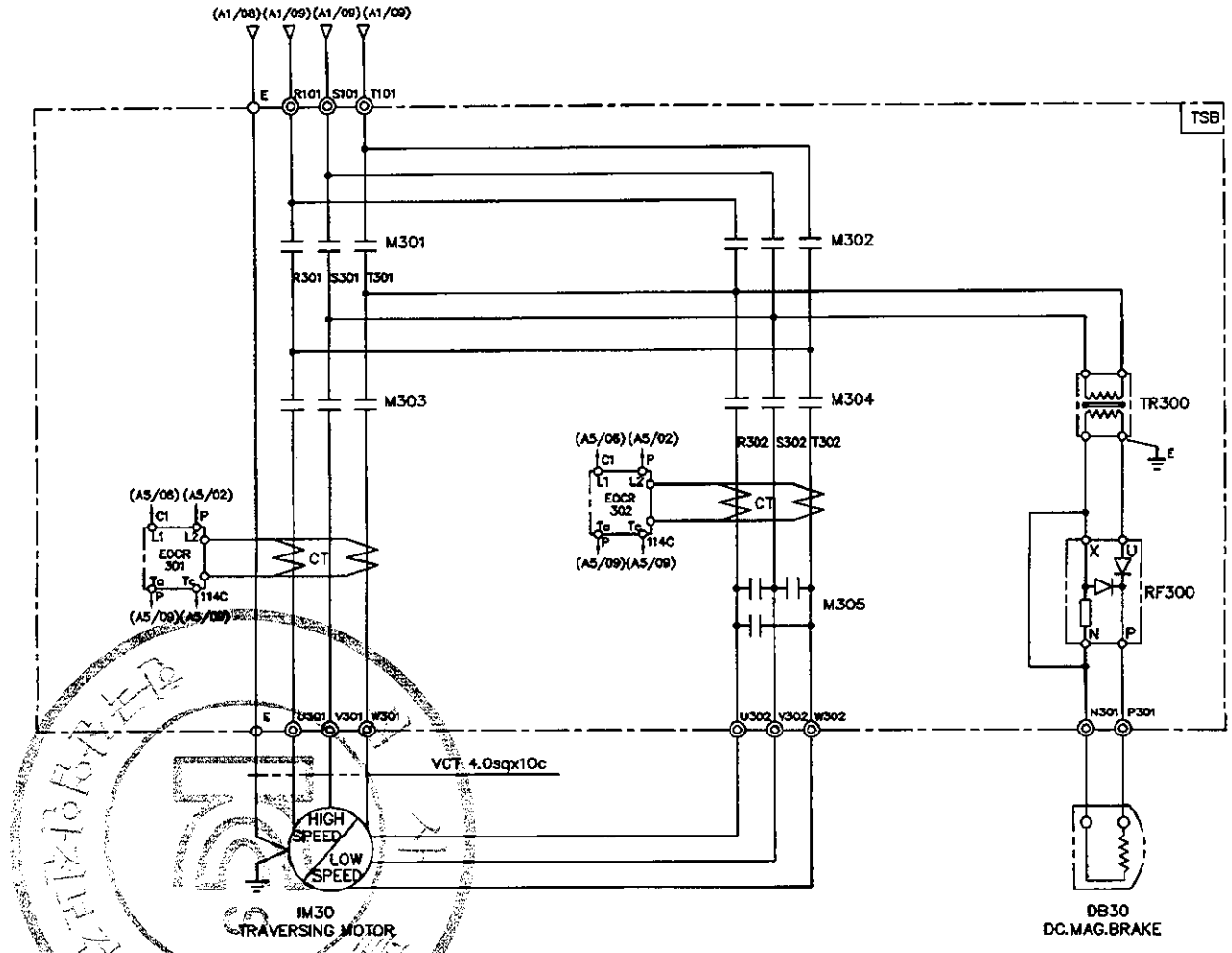

SPECIFICATION / SYMBOLS / DESCRIPTION		TRAVERSING MOTOR	DC MAG' BRAKE	MAGNET CONTACTOR		SILICON RECTIFIER	ELECTRIC OVER CURRENT RELAY	TRANSFORMER
		IM 30	DB30	M301 , M302 , M303	M304 , M305	RF 300	EOCR 301,302	TR300
	220V	0.8/0.4KWx4/8P AC3PH 220V 60Hz	DC 100V	DOC-22P	DOC-22R	SR-30	SS-05	AC220/220V, 300VA
	220V	0.5/0.25KWx6/12P AC3PH 220V 60Hz	DC 100V	DOC-22P	DOC-22R	SR-30	SS-05	AC220/220V, 300VA
SELECTION MAKER		KUKDONG		DEARYUK		ASECO		SHINWHAN

MK	DATE	REVISIONS	CHK.	APP.

CUSTOMER		DRAWING	DESIGN	CHECKED	APPROVED	SCALE	DATE	ORDER NO.
DRAWING TITLE	TRAVERSING POWER CONTROL CIRCUIT DIAGRAM					NONE		
		국동호이스트 주식회사 KUK DONG HOIST CO., LTD.				DWG. NO	KDC2E025	

KDC2E025

192.168.11.155 / 2011-06-17 15:51:30

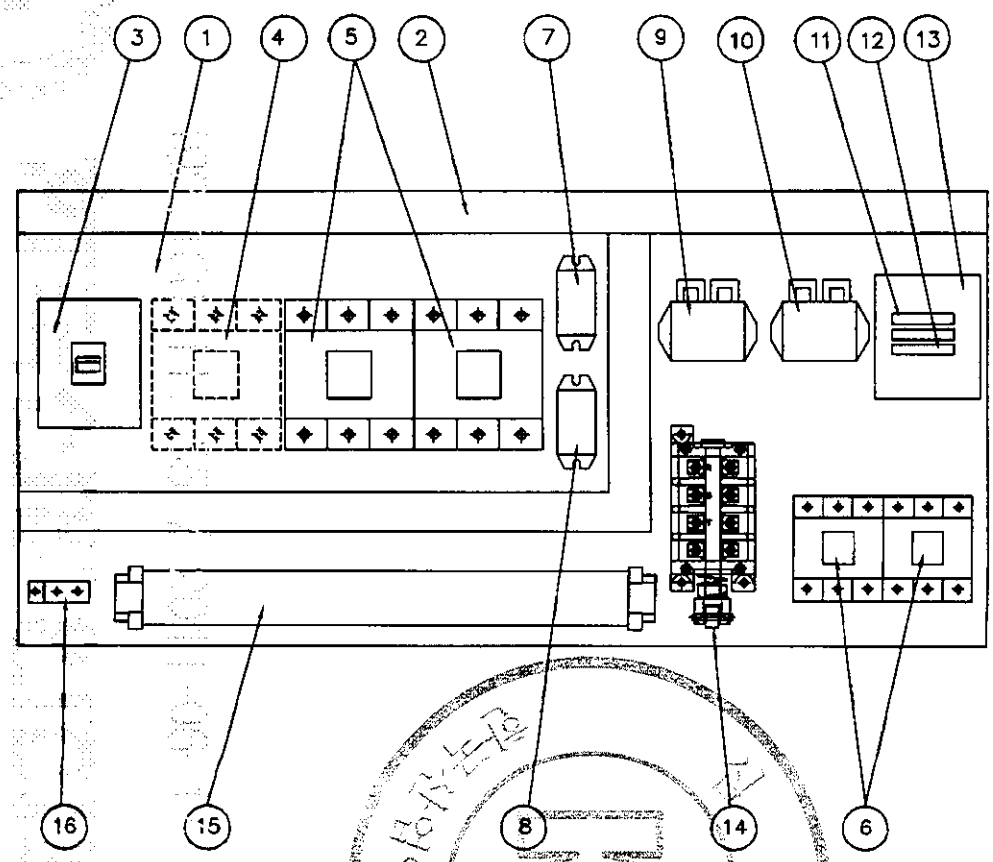

NO	DESCRIPTION	SPECIFICATION	Q'TY	REMARK
1	CHASSIS PLATE		1	아 연 도 금
2	CABLE DUCT	–	1	
3	N.F.B	33AF/15AT	1	HOISTING
4	MAGNET CONTACTOR	DOC–22P	1	MAIN MAG.
5	MAGNET CONTACTOR	DOC–22P	2	HOISTING
6	MAGNET CONTACTOR	DOC–22P	2	CREEP HOIST
7	SILICON RECTIFIER	SR–30	1	HOISTING
8	SILICON RECTIFIER	SR–30	1	CREEP HOIST
9	E.O.C.R	SS–30	1	HOISTING
10	E.O.C.R	SS–05	1	CREEP HOIST
11	FUSE	1 A	2	
12	FUSE	3 A	1	
13	TRANSFORMER	220V/110V(120V), 60VA	1	
14	UPPER LIMITER	AC 600V, 75A	1	LS–1,2
15	TERMINAL BLOCK	60A,15A		
16	EARTH TERMINAL	3tx20x50	1	

NOTE

1. UPPER LIMIT LS–1,LS–2의 접점 허용 전류 용량 : AC 600V, 75A
2. POWER SOURCE : AC. 3ø 380V 60HZ
3. EARTH TERMINAL RESISTANCE : 0.018Ω

NOTE

1. 전선의 색상은 다음과 같다.
   1) 흑색 : 교류 및 직류 전원선로
   2) 적색 : 교류제어선
   3) 주황색 : 외부 전원에서 공급되는 연동장치 제어회로
   4) 녹색 또는 녹색과 황색 혼용 : 접지선
2. CABLE MATERIAL : KIV OR EQUIVALENT
   MIN SIZE : 2.5sq
3. 제어용 전선 : 2.5mm KIV,HIV
4. 제작시 다소 변경 될수있음.
5. 외함 개방구조는 다음과 같을것.
   1) 외함 개방시 충전부분이 차단되도록 할것.
   2) 외함 개방후 충전되어있는 부분은 IP2X 이상의 직접 접촉 방호가 되어있을것.

MK	DATE	REVISIONS	CHK.	APP.
4				
3				
2				
1				

CUSTOMER	
DRAWING TITLE	CREEP HOIST CONTROL BOX ARRANGEMENT DRAWING

DRAWING	DESIGN	CHECKED	APPROVED	SCALE	DATE	ORDER NO.
				NONE		

KD 극동호이스트 주식회사 KUK DONG HOIST CO., LTD.

DWG. NO KDC2BA31

ADR'S NO.

본법복제 및 배포금지

192.168.11.155 / 2011-06-17 15:51:30

1	2	3	4	5	6	7	8	9	10	11	12	13	14	15	16	17	18	19	20.

ADR'S NO.

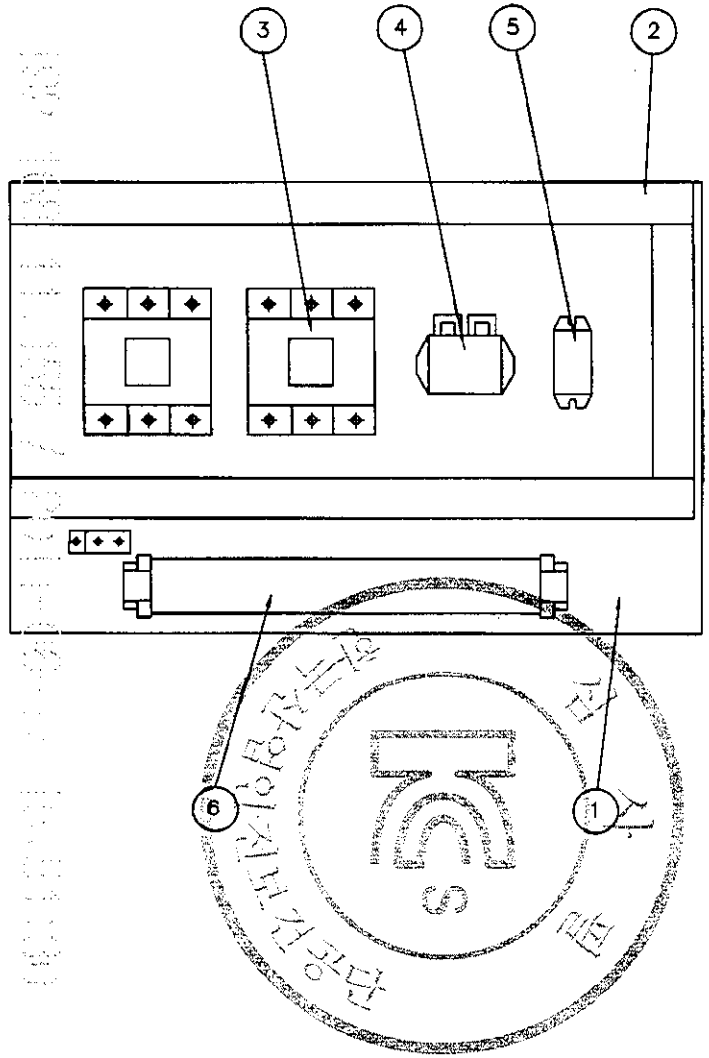

NO	DESCRIPTION	SPEC	Q'TY	REMARK
1	CHASSIS PLATE	–	1	아 연 도 금
2	CABLE DUCT	–	1	
3	MAGNET CONTACTOR	DOC–22P	2	TRAVERSING
4	E.O.C.R	SS–05	1	TRAVERSING
5	SILICON RECTIFIER	SR–30	1	TRAVERSING
6	TERMINAL BLOCK	25A , 15A	1	TRAVERSING

NOTE
1. 전선의 색상은 다음과 같다.
   1) 흑색 : 고류 및 직류 전원선로
   2) 적색 : 고류제어선
   3) 주황색 : 외부 전원에서 공급되는 연동장치 제어회로
   4) 녹색 또는 녹색과 황색 혼용 : 접지선
2. CABLE MATERIAL : KIV OR EQUIVALENT
   MIN SIZE : 2.5sq
3. 제어용 전선 : 2.5mm KIV,HIV
4. 제작시 다소 변경 될수있음.
5. 외함 개방구조는 다음과 같을것.
   1) 외함 개방시 충전부분이 차단되도록 할것.
   2) 외함 개방후 충전되어있는 부분은 IP2X 이상의 직접 접촉 방호가 되어있을것.

MK	DATE	REVISIONS	CHK.	APP.
4				
3				
2				
1				

CUSTOMER		DRAWING	DESIGN	CHECKED	APPROVED	SCALE	DATE	ORDER NO.
DRAWING TITLE	TRAVERSING POWER CONTROL BOX					NONE		
	ARRANGEMENT DRAWING	극동호이스트 주식회사 KUK DONG HOIST CO., LTD.				DWG. NO	KDC2bt32	

192.168.11.155 / 2011-06-17 15:51:30

불법복제 및 배포금지

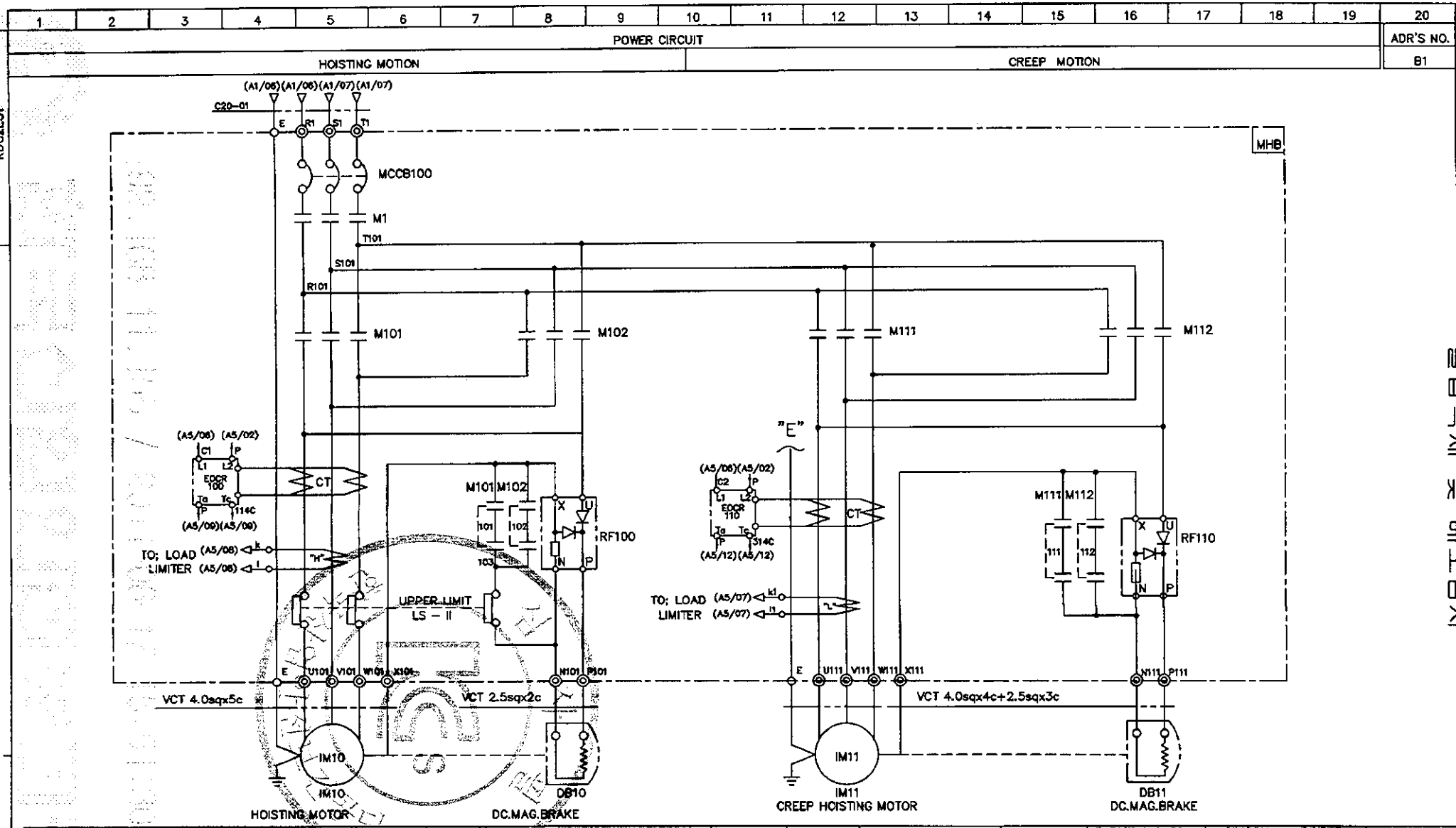

SPECIFICATION / SYMBOLS / DESCRIPTION	HOISTING POWER	HOISTING MOTOR	CREEP MOTOR	DC.MAG BRAKE	NO-FUSE BREAKER	TRANSFORMER	FUSE		MAIN CONTACTOR	MAGNET CONTACTOR		UPPER LIMIT	ELECTRIC OVER CURRENT RELAY		SILICON RECTIFIER		LOAD LIMITER	CABLE
	HOIST	IM 10	IM 11	DB10, 11	MCCB100	TR 1	F11,F12	F13	M1	M101,M102	M111, M112	LS-I, LS-II	EOCR100	EOCR110	RF100	RF110	LOAD LIMITER	C20-01
	2TON AC 3PH 380V 60Hz	3.7KWx4P	0.4KWx4P	DC 100V	DBE-33AF/15AT	380/110,120V,60VA	1A	2A	DOC-22P	DOC-40P	DOC-22P	AC 600V 75A	SS-30	SS-05	SR-30	SR-30	JDL-100	VCTF 3.5sqx4c
SELECTION MAKER	KUK DONG				DESRYUK	SHINWHAN	-		DEARYUK			KUK DONG	ASECO				JEUNGHO	DONGIL

MK	DATE	REVISIONS	CHK.	APP.
4				
3				
2				
1				

CUSTOMER		DRAWING	DESIGN	CHECKED	APPROVED	SCALE	DATE	ORDER NO.
DRAWING TITLE	CREEP HOISTING POWER CONTROL CIRCUIT DIAGRAM (FOR CRANE)					NONE		
		극동호이스트 주식회사 KUK DONG HOIST CO., LTD.				DWG. NO	KDC2E31	

192.168.11.155 / 2011-06-17 15:51:30

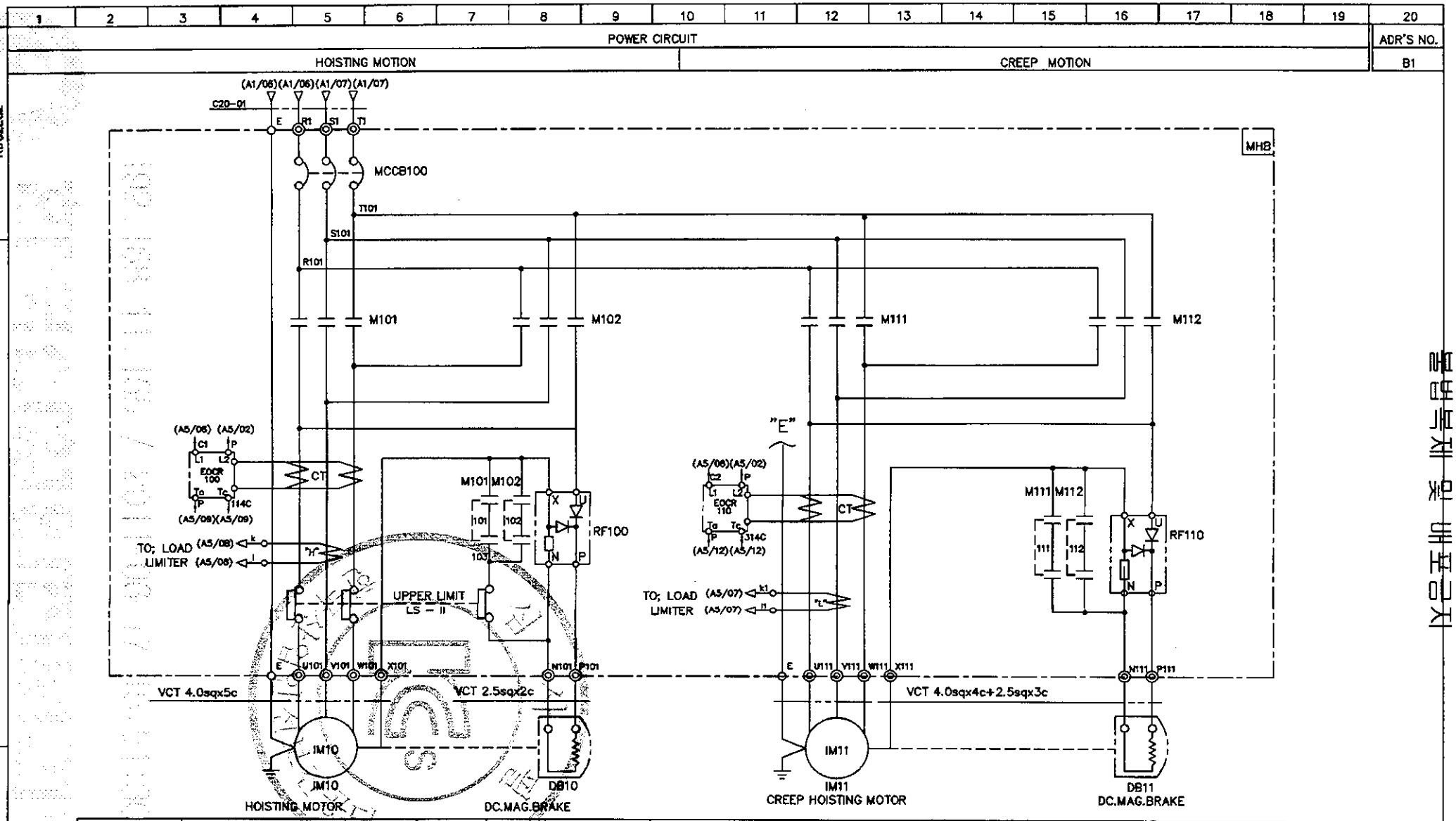

SPECIFICATION / SYMBOLS	HOISTING POWER	HOISTING MOTOR	CREEP MOTOR	DC.MAG BRAKE	NO FUSE BREAKER	TRANSFORMER	FUSE		MAGNET CONTACTOR		UPPER LIMIT	ELECTRIC OVER CURRENT RELAY		SILICON RECTIFIER		LOAD LIMITER	CABLE
DESCRIPTION	HOIST	IM-10	IM-11	DB10, 11	MCCB100	TR 1	F11,F12	F13	M101,M102	M111, M112	LS-I, LS-II	EOCR100	EOCR110	RF100	RF110	LOAD LIMITER	C20-01
	2TON AC 3PH 380V 60Hz	3.7KWx4P	0.4KWx4P	DC 100V	DBE-33AF/15AT	380/110,120V,60VA	1A	2A	DOC-40P	DOC-22P	AC 600V 75A	SS-30	SS-05	SR-30	SR-30	JDL-100	VCTF 3.5sqx4c
SELECTION / MAKER	KUK DONG				DESRYUK	SHINWHAN	-		DEARYUK		KUK DONG	ASECO				JEUNGHO	DONGIL

MK	DATE	REVISIONS	CHK.	APP.

CUSTOMER		DRAWING	DESIGN	CHECKED	APPROVED	SCALE	DATE	ORDER NO.
DRAWING TITLE	CREEP HOISTING POWER CONTROL CIRCUIT					NONE		
	DIAGRAM (FOR CRANE)	국동호이스트 주식회사 KUK DONG HOIST CO., LTD.				DWG. NO	KDC2E32	

192.168.11.155 / 2011-06-17 15:51:30

1	2	3	4	5	6	7	8	9	10	11	12	13	14	15	16	17	18	19	20

POWER CIRCUIT — ADR'S NO.

TRAVERSING MOTION — C1

KDC2E33

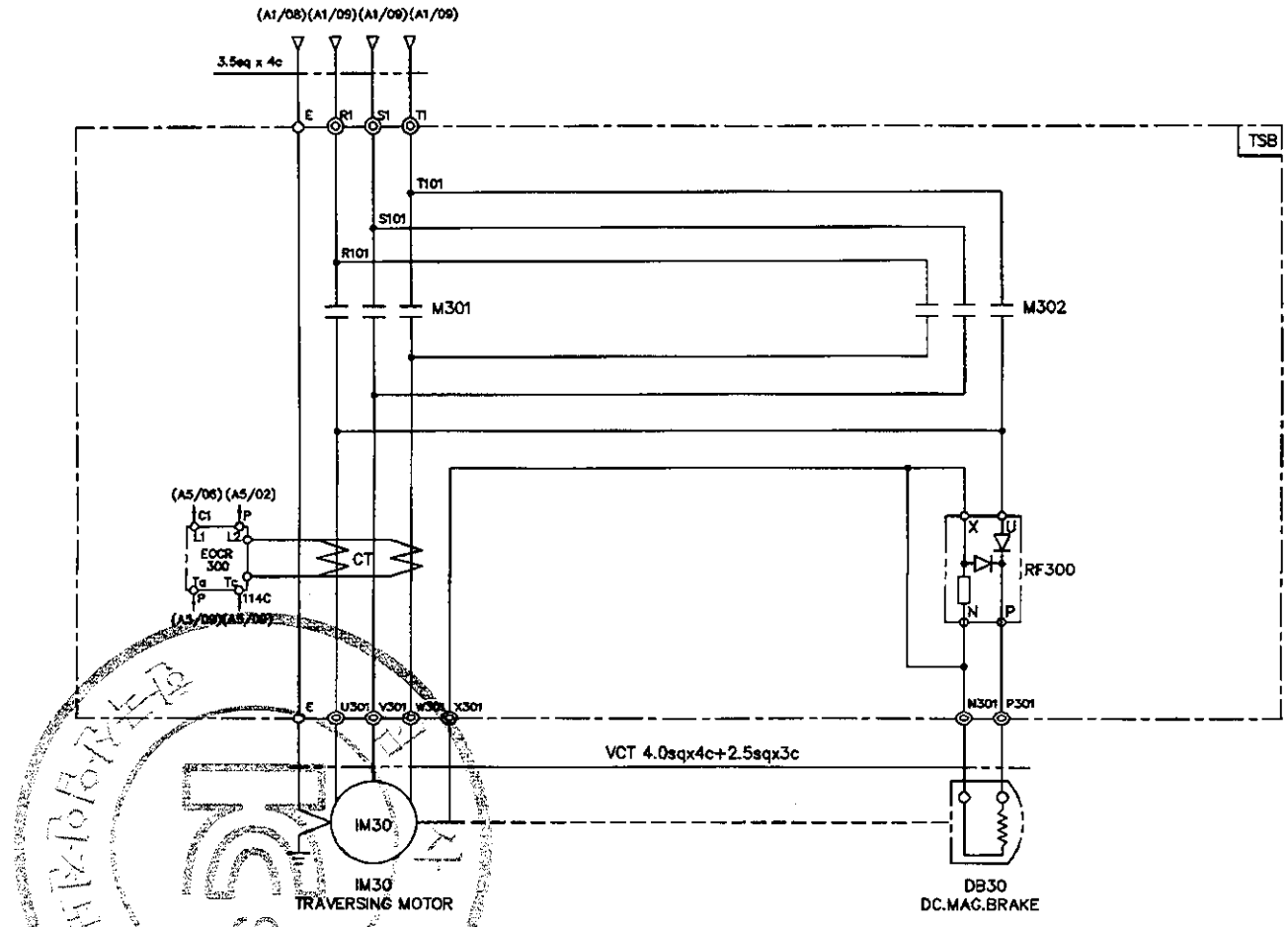

SPECIFICATION / SYMBOLS	TRAVERSING MOTOR	DC MAG' BRAKE	MAGNET CONTACTOR	SILICON RECTIFIER	ELECTRIC OVER CURRENT RELAY	LIMIT SWTCH
DESCRIPTION	IM 30	DB 30	M301 , M302	RF 300	EOCR 300	LS-301 , LS-302
	0.75KW x 4P AC 3PH 380V 60Hz	DC 100V	DOC-22P AC 110V	SR-30 AC 220V/DC 60V	SS-05	HY - W904
	0.5KW x 6P AC 3PH 380V 60Hz	DC 100V	DOC-22P AC 110V	SR-30 AC 220V/DC 60V	SS-05	HY - W904
SELECTION / MAKER	KUKDONG		DEARYUK	ASECO		

MK	DATE	REVISIONS	CHK.	APP.
4				
3				
2				
1				

CUSTOMER		DRAWING	DESIGN	CHECKED	APPROVED	SCALE	DATE	ORDER NO.
DRAWING TITLE	TRAVERSING POWER CONTROL CIRCUIT DIAGRAM					NONE		
		극동호이스트 주식회사 KUK DONG HOIST CO., LTD.				DWG. NO	KDC2E33	

192.168.11.155 / 2011-06-17 15:51:30

1	2	3	4	5	6	7	8	9	10	11	12	13	14	15	16	17	18	19	20

POWER CIRCUIT — ADR'S NO.

TRAVERSING MOTION — C2

KDC2E035

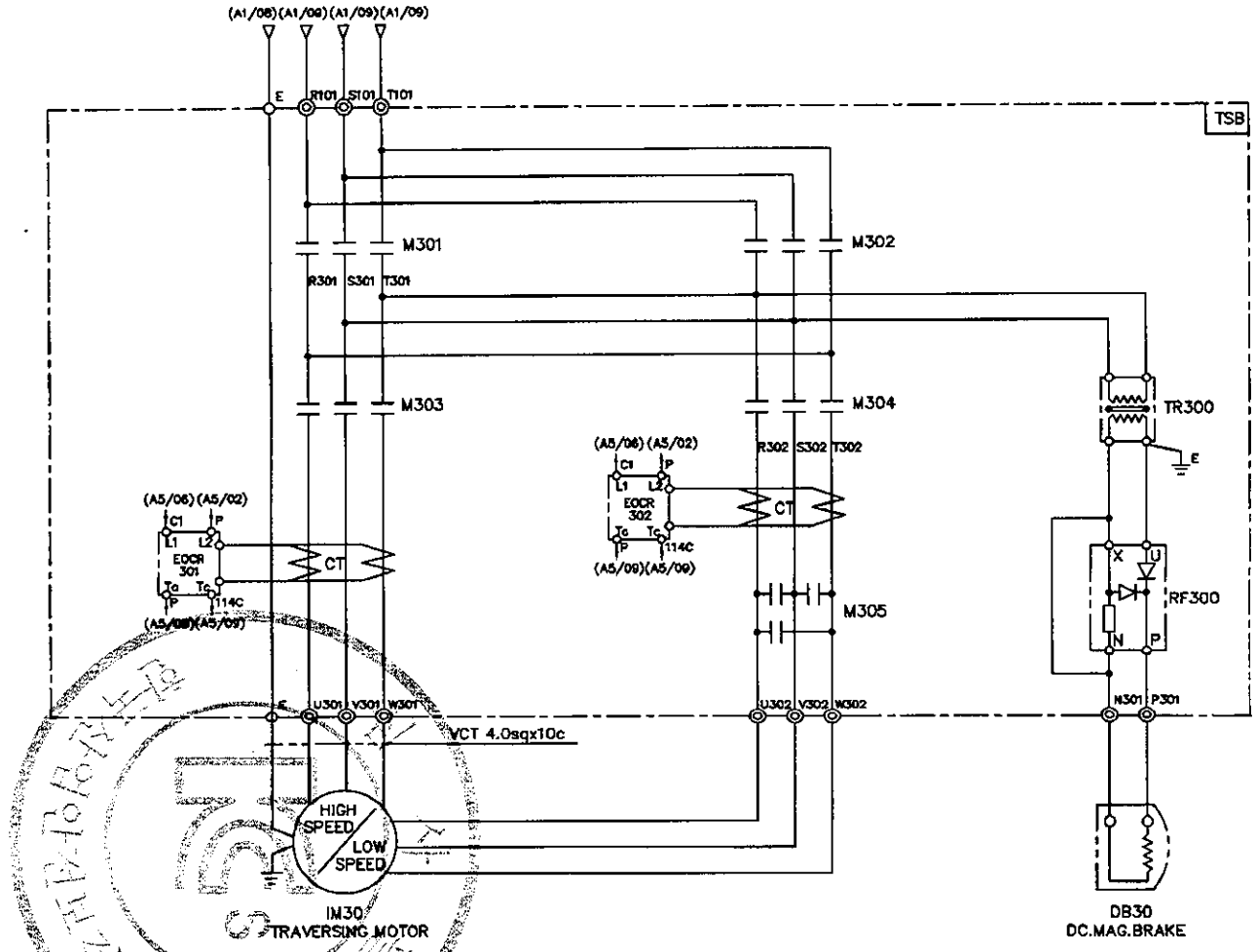

SPECIFICATION / SYMBOLS / DESCRIPTION		TRAVERSING MOTOR	DC MAG' BRAKE	MAGNET CONTACTOR		SILICON RECTIFIER	ELECTRIC OVER CURRENT RELAY	TRANSFORMER
		IM 30	DB30	M301 , M302 , M303	M304 , M305	RF 300	EOCR 301,302	TR300
	380V	0.6/0.4KWx4/8P AC3PH 380V 60Hz	DC 100V	DOC-22P	DOC-22R	SR-30	SS-05	AC380/220V, 300VA
	380V	0.5/0.25KWx6/12P AC3PH 380V 60Hz	DC 100V	DOC-22P	DOC-22R	SR-30	SS-05	AC380/220V, 300VA
SELECTION / MAKER		KUKDONG		DEARYUK		ASECO		SHINWHAN

MK	DATE	REVISIONS	CHK.	APP.
4				
3				
2				
1				

CUSTOMER	
DRAWING TITLE	TRAVERSING POWER CONTROL CIRCUIT DIAGRAM

DRAWING	DESIGN	CHECKED	APPROVED	SCALE	DATE	ORDER NO.
				NONE		

국동호이스트 주식회사
KUK DONG HOIST CO., LTD.

DWG. NO KDC2E035

192.168.11.155 / 2011-06-17 15:51:30

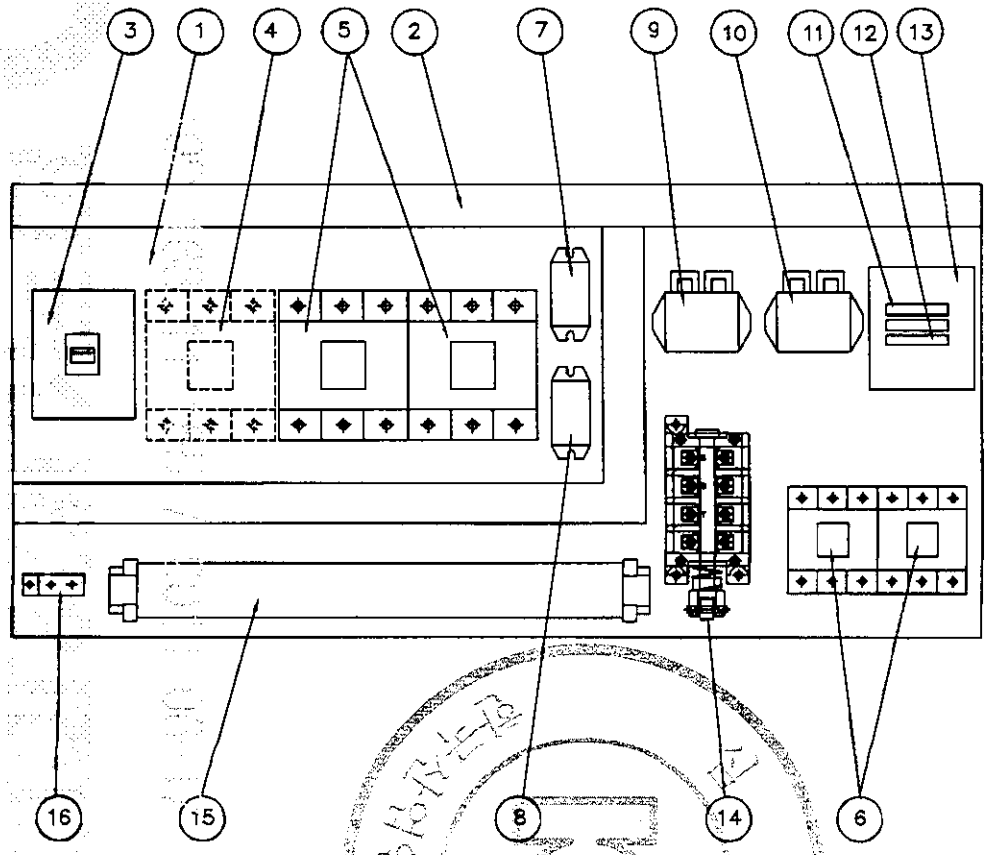

NO	DESCRIPTION	SPECIFICATION	Q'TY	REMARK
1	CHASSIS PLATE		1	아 연 도 금
2	CABLE DUCT	–	1	
3	N.F.B	33AF/15AT	1	HOISTING
4	MAGNET CONTACTOR	DOC–22P	1	MAIN MAG.
5	MAGNET CONTACTOR	DOC–22P	2	HOISTING
6	MAGNET CONTACTOR	DOC–22P	2	CREEP HOIST
7	SILICON RECTIFIER	SR–30	1	HOISTING
8	SILICON RECTIFIER	SR–30	1	CREEP HOIST
9	E.O.C.R	SS–30	1	HOISTING
10	E.O.C.R	SS–05	1	CREEP HOIST
11	FUSE	1 A	2	
12	FUSE	3 A	1	
13	TRANSFORMER	220V/110V(120V), 60VA	1	
14	UPPER LIMITER	AC 600V, 75A	1	LS–1,2
15	TERMINAL BLOCK	60A,15A		
16	EARTH TERMINAL	3tx20x50	1	

NOTE

1. UPPER LIMIT LS–1,LS–2의 접점 허용 전류 용량 : AC 600V, 75A
2. POWER SOURCE : AC. 3ø 440V 60HZ
3. EARTH TERMINAL RESISTANCE : 0.018Ω

NOTE

1. 전선의 색상은 다음과 같다.
   1) 흑색 : 고류 및 직류 전원선로
   2) 적색 : 고류제어선
   3) 주황색 : 외부 전원에서 공급되는 연동장치 제어회로
   4) 녹색 또는 녹색과 황색 혼용 : 접지선
2. CABLE MATERIAL : KIV OR EQUIVALENT / MIN SIZE : 2.5sq
3. 제어용 전선 : 2.5mm KIV,HIV
4. 제작시 다소 변경 될수있음.
5. 외함 개방구조는 다음과 같을것.
   1) 외함 개방시 충전부분이 차단되도록 할것.
   2) 외함 개방후 충전되어있는 부분은 IP2X 이상의 직접 접촉 방호가 되어있을것.

MK	DATE	REVISIONS	CHK.	APP.
⚠				
⚠				
⚠				
⚠				

CUSTOMER	
DRAWING TITLE	CREEP HOIST CONTROL BOX
	ARRANGEMENT DRAWING

DRAWING	DESIGN	CHECKED	APPROVED	SCALE	DATE	ORDER NO.
				NONE		

국동호이스트 주식회사
KUK DONG HOIST CO., LTD.

DWG. NO KDC2BA41

192.168.11.155 / 2011-06-17 15:51:30

불법복제 및 배포금지

192.168.11.155 / 2011-06-17 15:51:30

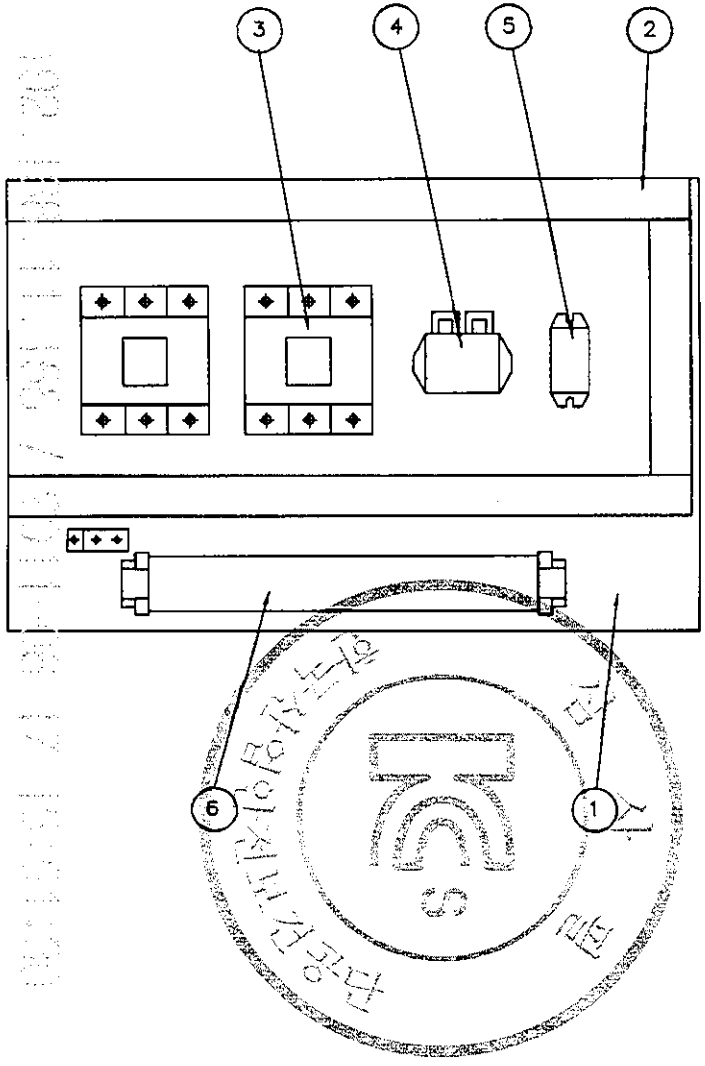

NO	DESCRIPTION	SPEC	Q'TY	REMARK
1	CHASSIS PLATE	–	1	아 연 도 금
2	CABLE DUCT	–	1	
3	MAGNET CONTACTOR	DOC–22P	2	TRAVERSING
4	E.O.C.R	SS–05	1	TRAVERSING
5	SILICON RECTIFIER	SR–30	1	TRAVERSING
6	TERMINAL BLOCK	25A , 15A	1	TRAVERSING

NOTE
1. 전선의 색상은 다음과 같다.
   1) 흑색 : 고류 및 직류 전원선로
   2) 적색 : 고류제어선
   3) 주황색 : 외부 전원에서 공급되는 연동장치 제어회로
   4) 녹색 또는 녹색과 황색 혼용 : 접지선
2. CABLE MATERIAL : KIV OR EQUIVALENT
   MIN SIZE : 2.5sq
3. 제어용 전선 : 2.5mm KIV,HIV
4. 제작시 다소 변경 될수있음.
5. 외함 개방구조는 다음과 같을것.
   1) 외함 개방시 충전부분이 차단되도록 할것.
   2) 외함 개방후 충전되어있는 부분은 IP2X 이상의 직접 접촉 방호가 되어있을것.

MK	DATE	REVISIONS	CHK.	APP.
4				
3				
2				
1				

CUSTOMER	
DRAWING TITLE	TRAVERSING POWER CONTROL BOX ARRANGEMENT DRAWING

DRAWING	DESIGN	CHECKED	APPROVED	SCALE	DATE	ORDER NO.
				NONE		

KD 극동호이스트 주식회사 KUK DONG HOIST CO., LTD.

DWG. NO KDC2bt42

ADR'S NO.

불법복제 및 배포금지

1	2	3	4	5	6	7	8	9	10	11	12	13	14	15	16	17	18	19	20

POWER CIRCUIT

ADR'S NO. B1

HOISTING MOTION | CREEP HOIST MOTION

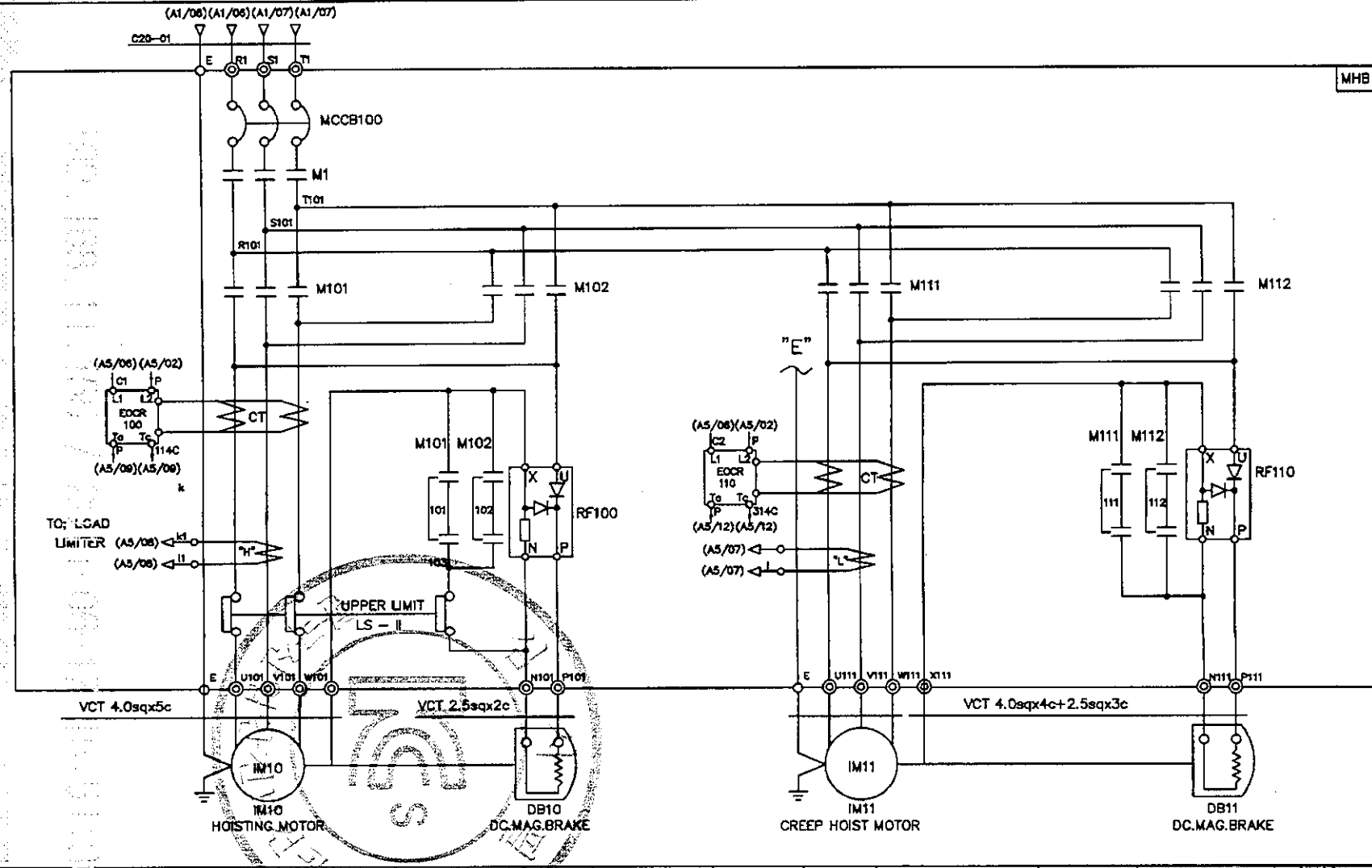

SPECIFICATION / SYMBOLS / DESCRIPTION	HOISTING POWER	HOISTING MOTOR	CREEP MOTOR	DC.MAG BRAKE	NO FUSE BREAKER	TRANSFORMER	FUSE		MAIN MAGNET	MAGNET CONTACTOR		UPPER LIMIT	ELECTRIC OVER CURRENT RELAY		SILICON RECTIFIER		LOAD LIMITER	CABLE
	HOIST	IM 10	IM 11	DB10, 11	MCCB100	TR 1	F11,F12	F13	M1	M101,M102	M111,M112	LS-I, LS-II	EOCR100	EOCR110	RF100	RF110	LOAD LIMITER	C20-01
	2TON AC 3PH 440V 60Hz	3.7KW x 4P	0.4KWx4P	DC-100V	DBE-33AF/15A	440/110V,120V,60VA	1A	3A	DOC-22P	DOC-22P	DOC-22P	AC 600V 75A	SS-30	SS-05	SR-30	SR-30	JDL-100	VFCT 4sqx4c
SELECTION / MAKER	KUKDONG				DAERYUK	SHINHAN	-		DAERYUK			KUKDONG	ASECO				JEUNGHO	DONGIL

MK	DATE	REVISIONS	CHK.	APP.
4				
3				
2				
1				

CUSTOMER		DRAWING	DESIGN	CHECKED	APPROVED	SCALE	DATE	ORDER NO.
DRAWING TITLE	CREEP HOISTING POWER CONTROL CIRCUIT DIAGRAM					NONE		
		극동호이스트 주식회사 KUK DONG HOIST CO., LTD.				DWG. NO	KDC2E41	

192.168.11.155 / 2011-06-17 15:51:30

불법복제 및 배포금지

1	2	3	4	5	6	7	8	9	10	11	12	13	14	15	16	17	18	19	20

POWER CIRCUIT — ADR'S NO. B1

HOISTING MOTION | CREEP MOTION

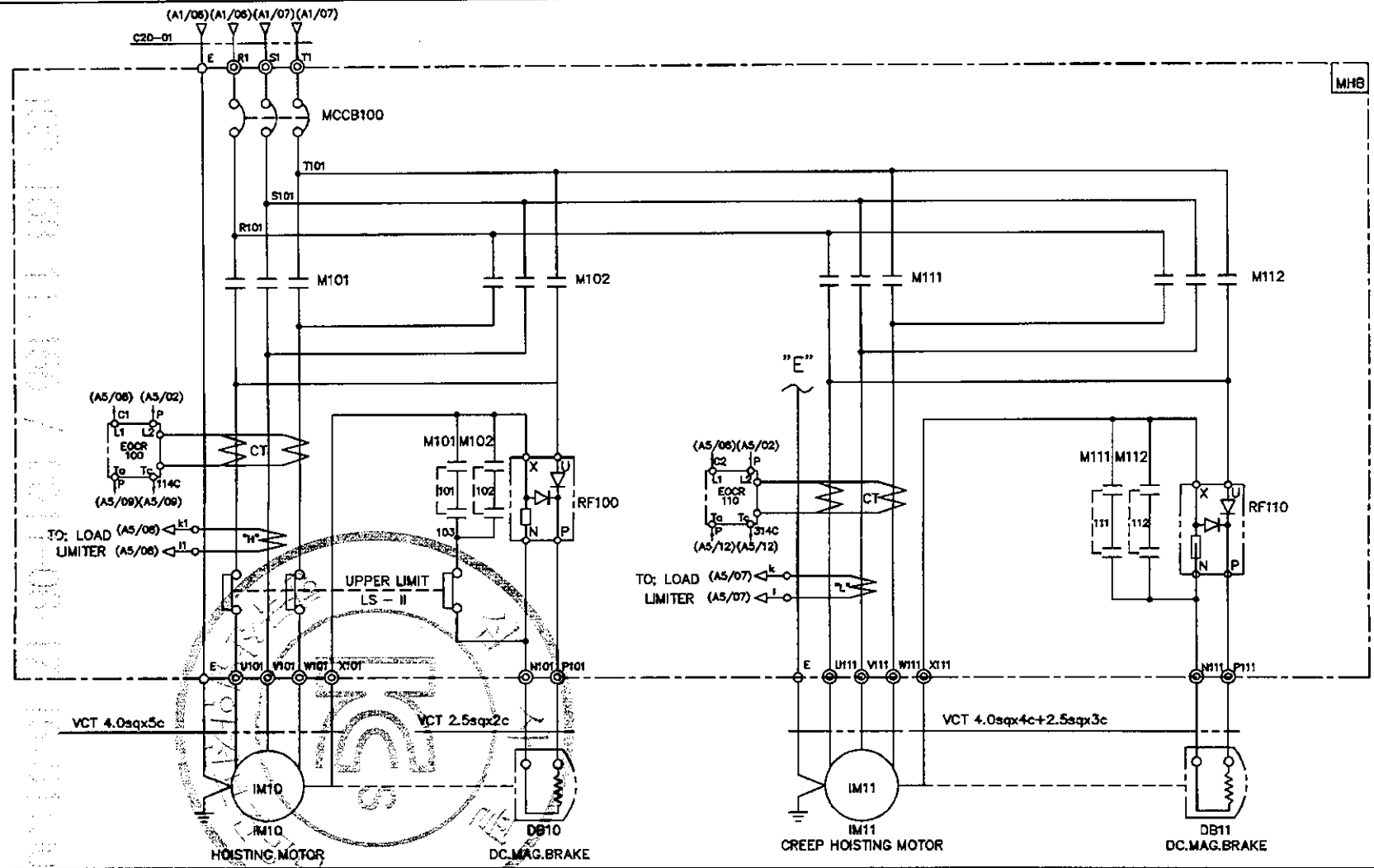

SPECIFICATION / SYMBOLS / DESCRIPTION	HOISTING POWER	HOISTING MOTOR	CREEP MOTOR	DC MAG. BRAKE	NO FUSE BREAKER	TRANSFORMER	FUSE		MAGNET CONTACTOR		UPPER LIMIT	ELECTRIC OVER CURRENT RELAY		SILICON RECTIFIER		LOAD LIMITER	CABLE
	HOIST	IM10	IM11	DB10, 11	MCCB100	TR 1	F11,F12	F13	M101,M102	M111,M112	LS-I, LS-II	EOCR100	EOCR110	RF100	RF110	LOAD LIMITER	C20-01
	2TON AC 3PH 440V 60Hz	3.7KWx4P	0.4KWx4P	DC 100V	DBE-33AF/15AT	440/110,120V,60VA	1A	2A	DOC-40P	DOC-22P	AC 600V 75A	SS-30	SS-05	SR-30	SR-30	JDL-100	VCTF 3.5sqx4c
SELECTION / MAKER	KUK DONG				DEARYUK	SHINWHAN	-		DEARYUK		KUK DONG	ASECO				JEUNGHO	DONGIL

MK	DATE	REVISIONS	CHK.	APP.
4				
3				
2				
1				

CUSTOMER		DRAWING	DESIGN	CHECKED	APPROVED	SCALE	DATE	ORDER NO.
DRAWING TITLE	CREEP HOISTING POWER CONTROL CIRCUIT DIAGRAM					NONE		

국동호이스트 주식회사 KUK DONG HOIST CO., LTD.

DWG. NO KDC2E42

KDC2E42

192.168.11.155 / 2011-06-17 15:51:30

1	2	3	4	5	6	7	8	9	10	11	12	13	14	15	16	17	18	19	20

POWER CIRCUIT — ADR'S NO.

TRAVERSING MOTION — C1

KDC2E43

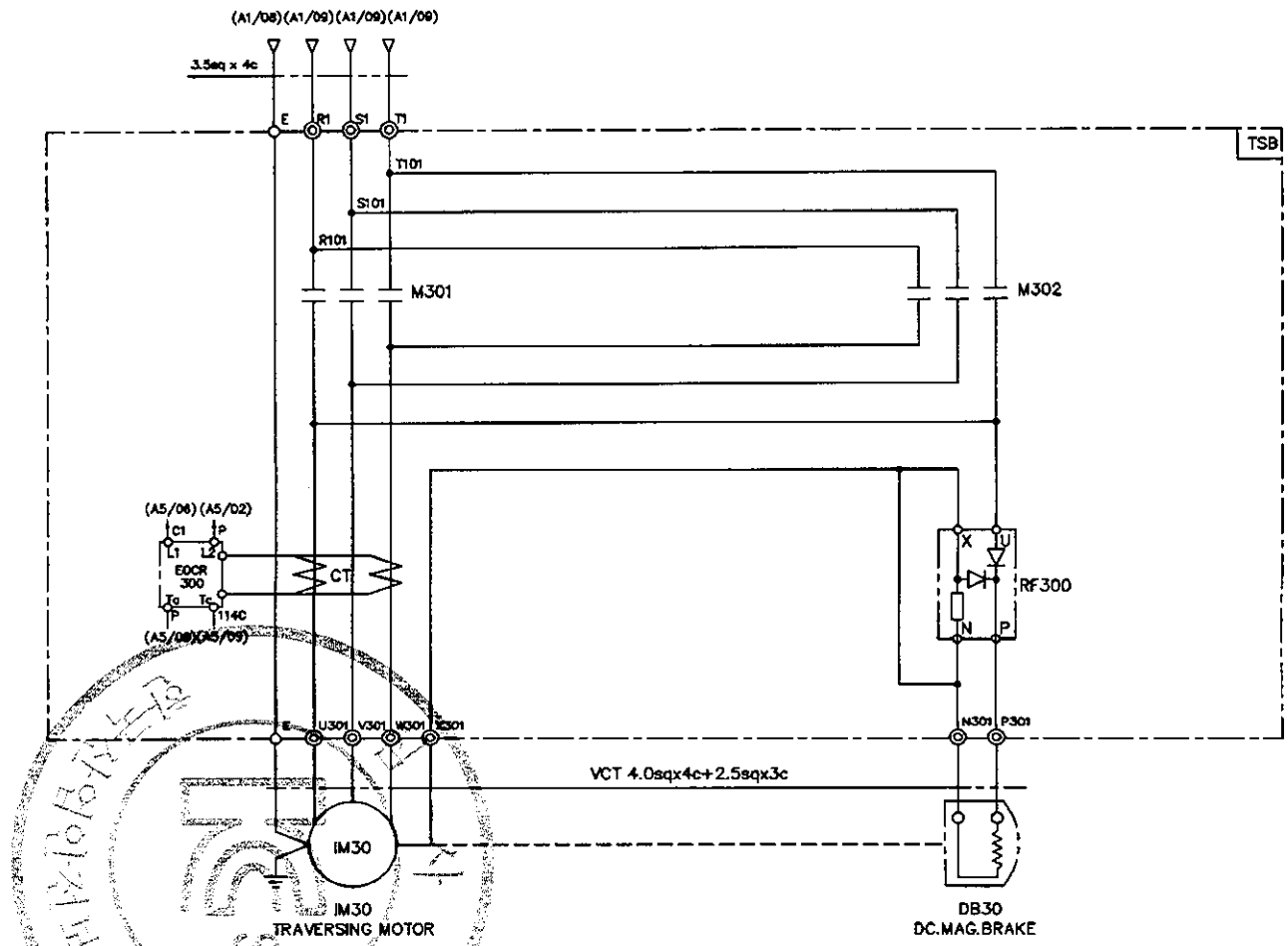

SPECIFICATION / SYMBOLS	TRAVERSING MOTOR	DC MAG' BRAKE	MAGNET CONTACTOR	SILICON RECTIFIER	ELECTRIC OVER CURRENT RELAY	LIMIT SWTCH
DESCRIPTION	IM 30	DB 30	M301 , M302	RF 300	EOCR 300	LS-301 , LS-302
	0.75KW x 4P AC 3PH 440V 60Hz	DC 100V	DOC-22P AC 110V	SR-30 AC 220V/DC 60V	SS-05	HY - W904
	0.5KW x 6P AC 3PH 440V 60Hz	DC 100V	DOC-22P AC 110V	SR-30 AC 220V/DC 60V	SS-05	HY - W904
SELECTION MAKER	KUK DONG		DEARYUK	ASECO		

MK	DATE	REVISIONS	CHK.	APP.
4				
3				
2				
1				

CUSTOMER		DRAWING	DESIGN	CHECKED	APPROVED	SCALE	DATE	ORDER NO.
DRAWING TITLE	TRAVERSING POWER CONTROL CIRCUIT DIAGRAM					NONE		
		국동호이스트 주식회사 KUK DONG HOIST CO., LTD.				DWG. NO	KDC2E43	

192.168.11.155 / 2011-06-17 15:51:30

1	2	3	4	5	6	7	8	9	10	11	12	13	14	15	16	17	18	19	20

POWER CIRCUIT

TRAVERSING MOTION

ADR'S NO. C2

KDC2E045

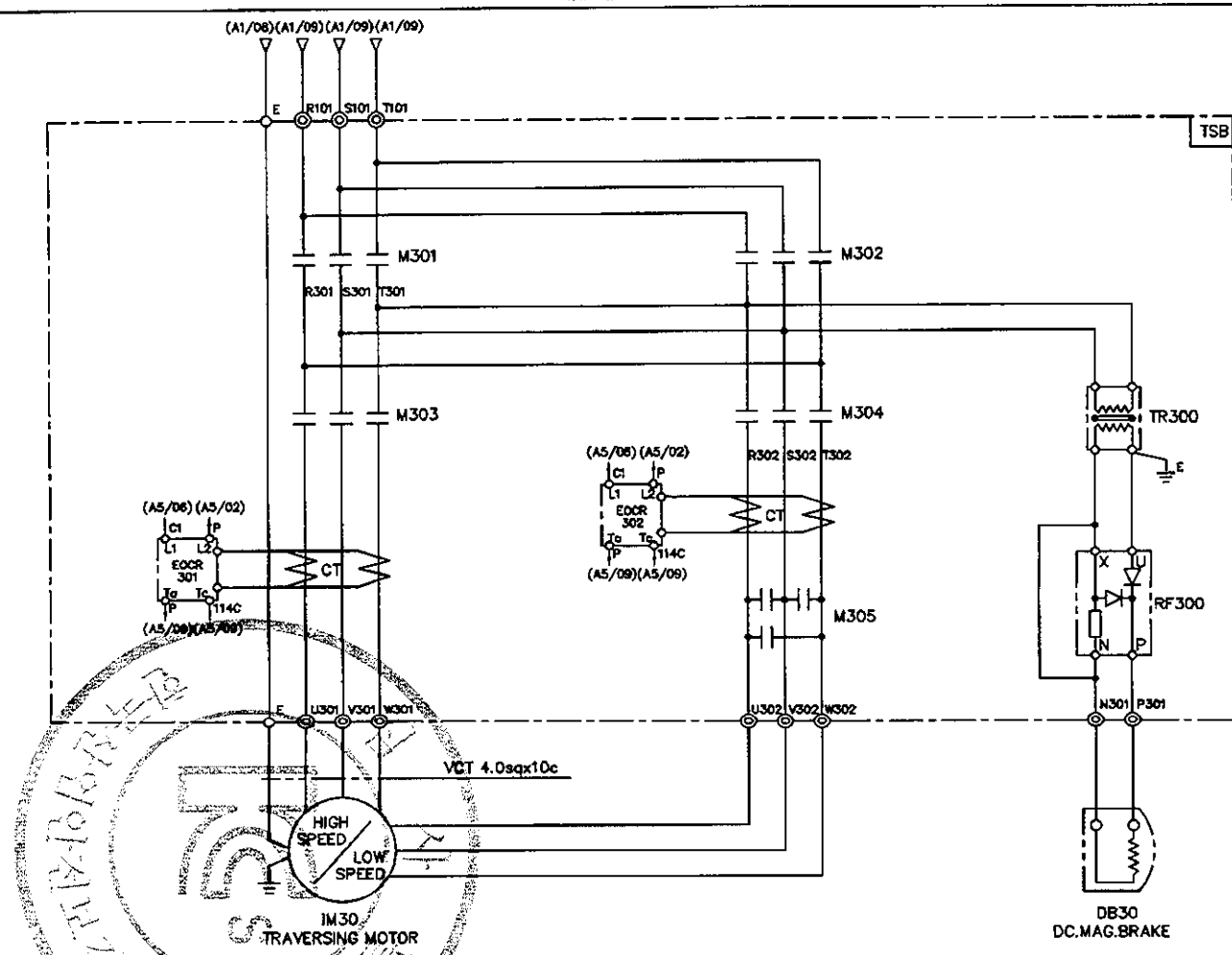

SPECIFICATION / SYMBOLS / DESCRIPTION		TRAVERSING MOTOR	DC MAG' BRAKE	MAGNET CONTACTOR		SILICON RECTIFIER	ELECTRIC OVER CURRENT RELAY	TRANSFORMER
		IM 30	DB30	M301 , M302 , M303	M304 , M305	RF 300	EOCR 301,302	TR300
	440V	0.8/0.4KWx4/8P AC3PH 440V 60Hz	DC 100V	DOC-22P	DOC-22R	SR-30	SS-05	AC440/220V, 300VA
	440V	0.5/0.25KWx6/12P AC3PH 440V 60Hz	DC 100V	DOC-22P	DOC-22R	SR-30	SS-05	AC440/220V, 300VA
SELECTION / MAKER		KUK DONG		DEARYUK		ASECO		SHINWHAN

MK	DATE	REVISIONS	CHK.	APP.
4				
3				
2				
1				

CUSTOMER		DRAWING	DESIGN	CHECKED	APPROVED	SCALE	DATE	ORDER NO.
DRAWING TITLE	TRAVERSING POWER CONTROL CIRCUIT DIAGRAM					NONE		
		극동호이스트 주식회사 KUK DONG HOIST CO., LTD.				DWG. NO	KDC2E045	

192.168.11.155 / 2011-06-17 15:51:30

192.168.11.155 / 2011-06-17 15:51:30

불법복제 및 배포금지

ADR'S NO.

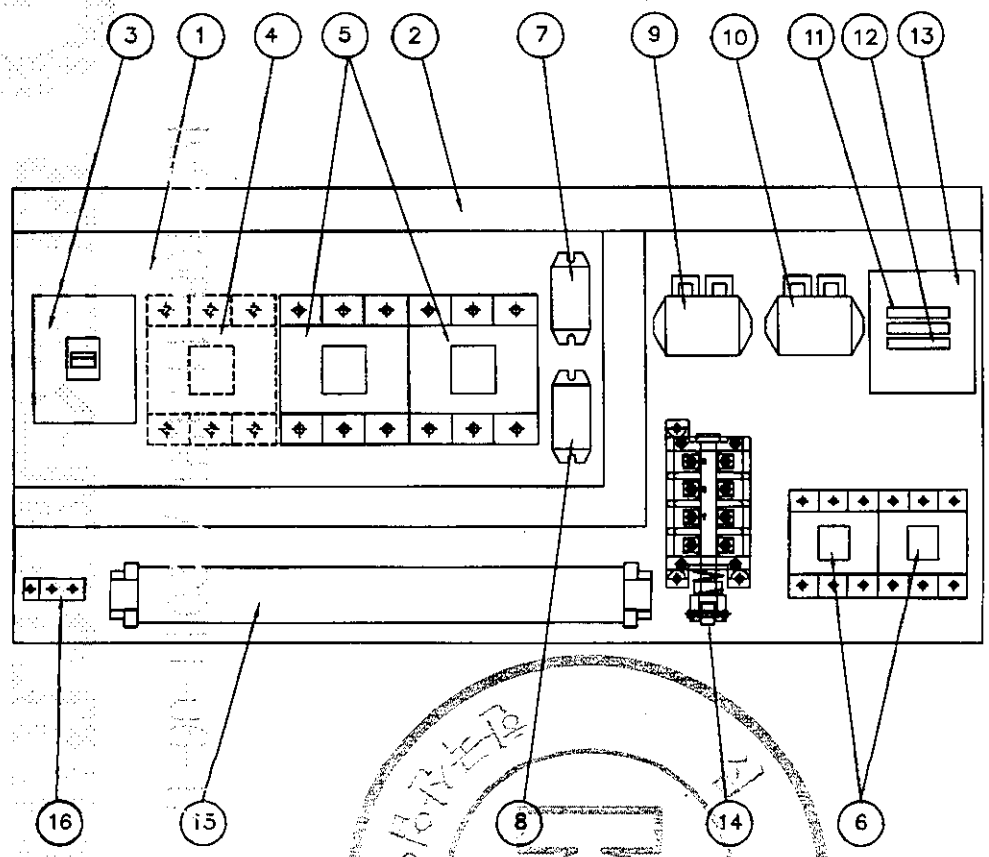

NO	DESCRIPTION	SPECIFICATION	Q'TY	REMARK
1	CHASSIS PLATE		1	아 연 도 금
2	CABLE DUCT	–	1	
3	N.F.B	33AF/15AT	1	HOISTING
4	MAGNET CONTACTOR	DOC–22P	1	MAIN MAG.
5	MAGNET CONTACTOR	DOC–22P	2	HOISTING
6	MAGNET CONTACTOR	DOC–22P	2	CREEP HOIST
7	SILICON RECTIFIER	SR–30	1	HOISTING
8	SILICON RECTIFIER	SR–30	1	CREEP HOIST
9	E.O.C.R	SS–30	1	HOISTING
10	E.O.C.R	SS–05	1	CREEP HOIST
11	FUSE	1 A	2	
12	FUSE	3 A	1	
13	TRANSFORMER	220V/110V(120V), 60VA	1	
14	UPPER LIMITER	AC 600V, 75A	1	LS–1,2
15	TERMINAL BLOCK	60A,15A		
16	EARTH TERMINAL	3tx20x50	1	

NOTE

1. UPPER LIMIT LS–1,LS–2의 접점 허용 전류 용량 : AC 600V, 75A
2. POWER SOURCE : AC. 3ø 460V 60HZ
3. EARTH TERMINAL RESISTANCE : 0.018Ω

NOTE

1. 전선의 색상은 다음과 같다.
   1) 흑색 : 고류 및 직류 전원선로
   2) 적색 : 고류제어선
   3) 주황색 : 외부 전원에서 공급되는 연동장치 제어회로
   4) 녹색 또는 녹색과 황색 혼용 : 접지선
2. CABLE MATERIAL : KIV OR EQUIVALENT
   MIN SIZE : 2.5sq
3. 제어용 전선 : 2.5mm KIV,HIV
4. 제작시 다소 변경 될수있음.
5. 외함 개방구조는 다음과 같을것.
   1) 외함 개방시 충전부분이 차단되도록 할것.
   2) 외함 개방후 충전되어있는 부분은 IP2X 이상의 직접 접촉 방호가 되어있을것.

MK	DATE	REVISIONS	CHK.	APP.
4				
3				
2				
1				

CUSTOMER		DRAWING	DESIGN	CHECKED	APPROVED	SCALE	DATE	ORDER NO.
DRAWING TITLE	CREEP HOIST CONTROL BOX					NONE		
	ARRANGEMENT DRAWING	극동호이스트 주식회사 KUK DONG HOIST CO., LTD.				DWG. NO	KDC2BA51	

192.168.11.155 / 2011-06-17 15:51:30

불법복제 및 배포금지

ADR'S NO.

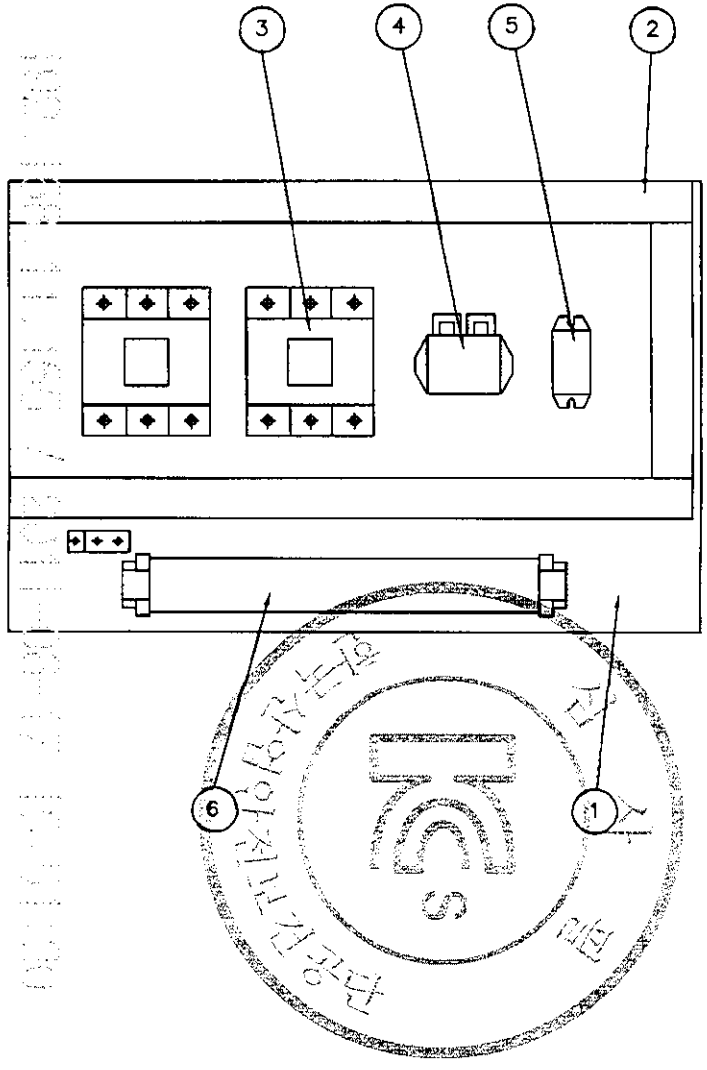

NO	DESCRIPTION	SPEC	Q'TY	REMARK
1	CHASSIS PLATE	–	1	아 연 도 금
2	CABLE DUCT	–	1	
3	MAGNET CONTACTOR	DOC–22P	2	TRAVERSING
4	E.O.C.R	SS–05	1	TRAVERSING
5	SILICON RECTIFIER	SR–30	1	TRAVERSING
6	TERMINAL BLOCK	25A , 15A	1	TRAVERSING

NOTE
1. 전선의 색상은 다음과 같다.
   1) 흑색 : 고류 및 직류 전원선로
   2) 적색 : 고류제어선
   3) 주황색 : 외부 전원에서 공급되는 연동장치 제어회로
   4) 녹색 또는 녹색과 황색 혼용 : 접지선
2. CABLE MATERIAL : KIV OR EQUIVALENT
   MIN SIZE : 2.5sq
3. 제어용 전선 : 2.5mm KIV,HIV
4. 제작시 다소 변경 될수있음.
5. 외함 개방구조는 다음과 같을것.
   1) 외함 개방시 충전부분이 차단되도록 할것.
   2) 외함 개방후 충전되어있는 부분은 IP2X 이상의 직접 접촉 방호가 되어있을것.

MK	DATE	REVISIONS	CHK.	APP.

CUSTOMER	
DRAWING TITLE	TRAVERSING POWER CONTROL BOX ARRANGEMENT DRAWING

DRAWING	DESIGN	CHECKED	APPROVED	SCALE	DATE	ORDER NO.
				NONE		

극동호이스트 주식회사
KUK DONG HOIST CO., LTD.

DWG. NO KDC2bt52

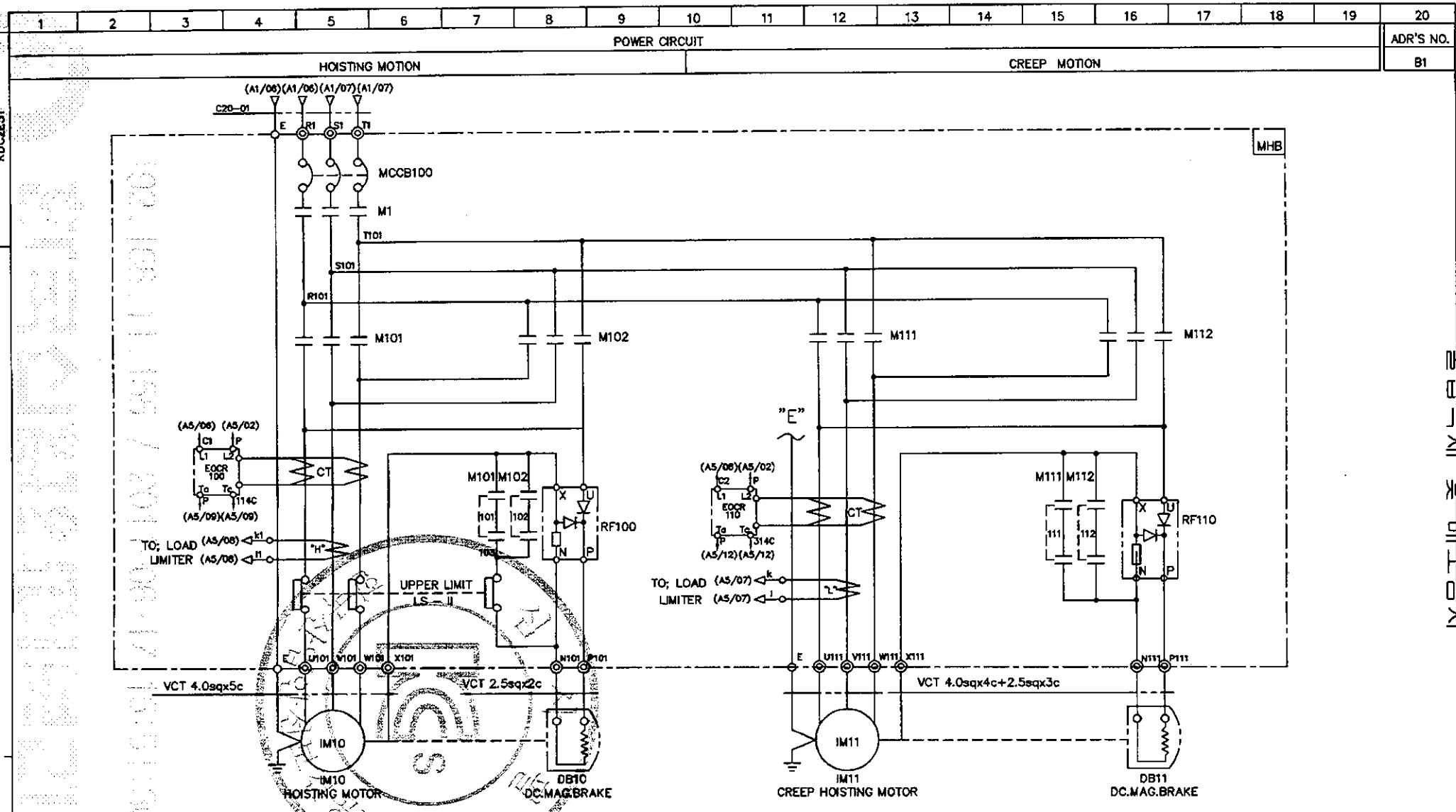

SPECIFICATION / SYMBOLS / DESCRIPTION	HOISTING POWER	HOISTING MOTOR	CREEP MOTOR	DC.MAG BRAKE	NO FUSE BREAKER	TRANSFORMER	FUSE		MAIN CONTACTOR	MAGNET CONTACTOR		UPPER LIMIT	ELECTRIC OVER CURRENT RELAY		SILICON RECTIFIER		LOAD LIMITER	CABLE
	HOIST	IM 10	IM 11	DB10, 11	MCCB100	TR 1	F11,F12	F13	M1	M101,M102	M111,M112	LS-I, LS-II	EOCR100	EOCR110	RF100	RF110	LOAD LIMITER	C20-01
	2TON AC 3PH 460V 60Hz	3.7KWx4P	0.4KW x 4P	DC 100V	DBE-33AF/15AT	460/110,120V,60VA	1A	2A	DOC-22P	DOC-40P	DOC-22P	AC 600V 75A	SS-30	SS-05	SR-30	SR-30	JDL-100	VCTF 4.0sqx4c
SELECTION MAKER	KUK DONG				DEARYUK	SHINWHAN	–		DEARYUK			KUK DONG	ASECO				JEUNGHO	DONGIL

MK	DATE	REVISIONS	CHK.	APP.
4				
3				
2				
1				

CUSTOMER		DRAWING	DESIGN	CHECKED	APPROVED	SCALE	DATE	ORDER NO.
DRAWING TITLE	CREEP HOISTING POWER CONTROL CIRCUIT DIAGRAM (FOR CRANE)					NONE		
		국동호이스트 주식회사 KUK DONG HOIST CO., LTD.				DWG. NO	KDC2E51	

192.168.11.155 / 2011-06-17 15:51:30

192.168.11.155 / 2011-06-17 15:51:30

KDC2E52

1	2	3	4	5	6	7	8	9	10	11	12	13	14	15	16	17	18	19	20

POWER CIRCUIT

HOISTING MOTION | CREEP MOTION

ADR'S NO. B1

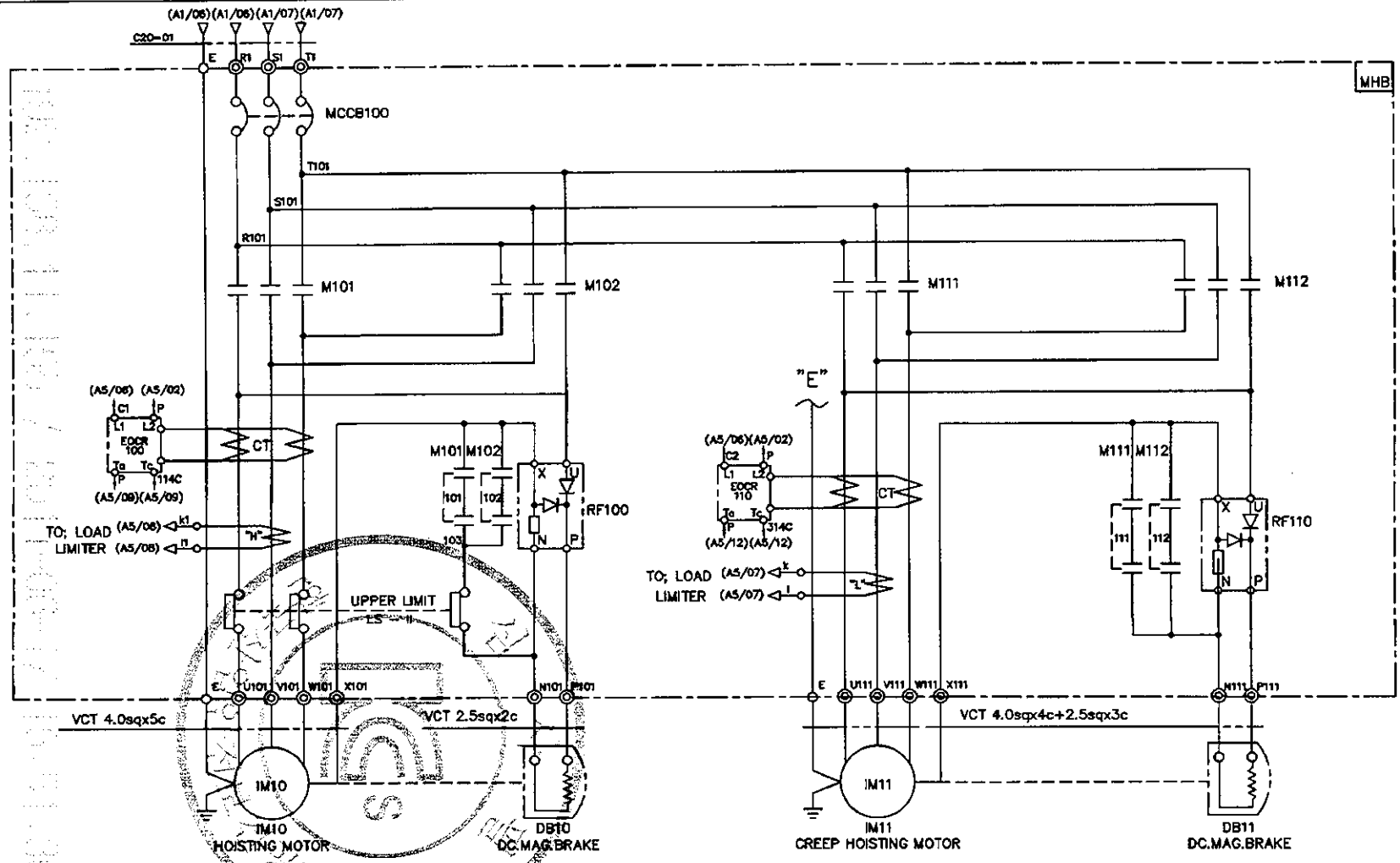

SPECIFICATION / SYMBOLS / DESCRIPTION	HOISTING POWER	HOISTING MOTOR	CREEP MOTOR	DC.MAG BRAKE	NO FUSE BREAKER	TRANSFORMER	FUSE		MAGNET CONTACTOR		UPPER LIMIT	ELECTRIC OVER CURRENT RELAY		SILICON RECTIFIER		LOAD LIMITER	CABLE
	HOIST	IM 10	IM 11	DB10, 11	MCCB100	TR 1	F11,F12	F13	M101,M102	M111,M112	LS-I, LS-II	EOCR100	EOCR110	RF100	RF110	LOAD LIMITER	C20-01
	2TON AC 3PH 460V 60Hz	3.7KWx4P	0.4KW x 4P	DC 100V	DBE-33AF/15AT	460/110,120V,60VA	1A	2A	DOC-40P	DOC-22P	AC 600V 75A	SS-30	SS-05	SR-30	SR-30	JDL-100	VCTF 4.0sqx4c
SELECTION MAKER	KUK DONG				DEARYUK	SHINWHAN	–		DEARYUK		KUK DONG	ASECO				JEUNGHO	DONGIL

MK	DATE	REVISIONS	CHK.	APP.
4				
3				
2				
1				

CUSTOMER

DRAWING TITLE: CREEP HOISTING POWER CONTROL CIRCUIT DIAGRAM (FOR CRANE)

DRAWING	DESIGN	CHECKED	APPROVED	SCALE	DATE	ORDER NO.
				NONE		

국동호이스트 주식회사 KUK DONG HOIST CO., LTD.

DWG. NO KDC2E52

불법복제 및 배포금지

1	2	3	4	5	6	7	8	9	10	11	12	13	14	15	16	17	18	19	20

POWER CIRCUIT — ADR'S NO.

TRAVERSING MOTION — C1

KDC2E53

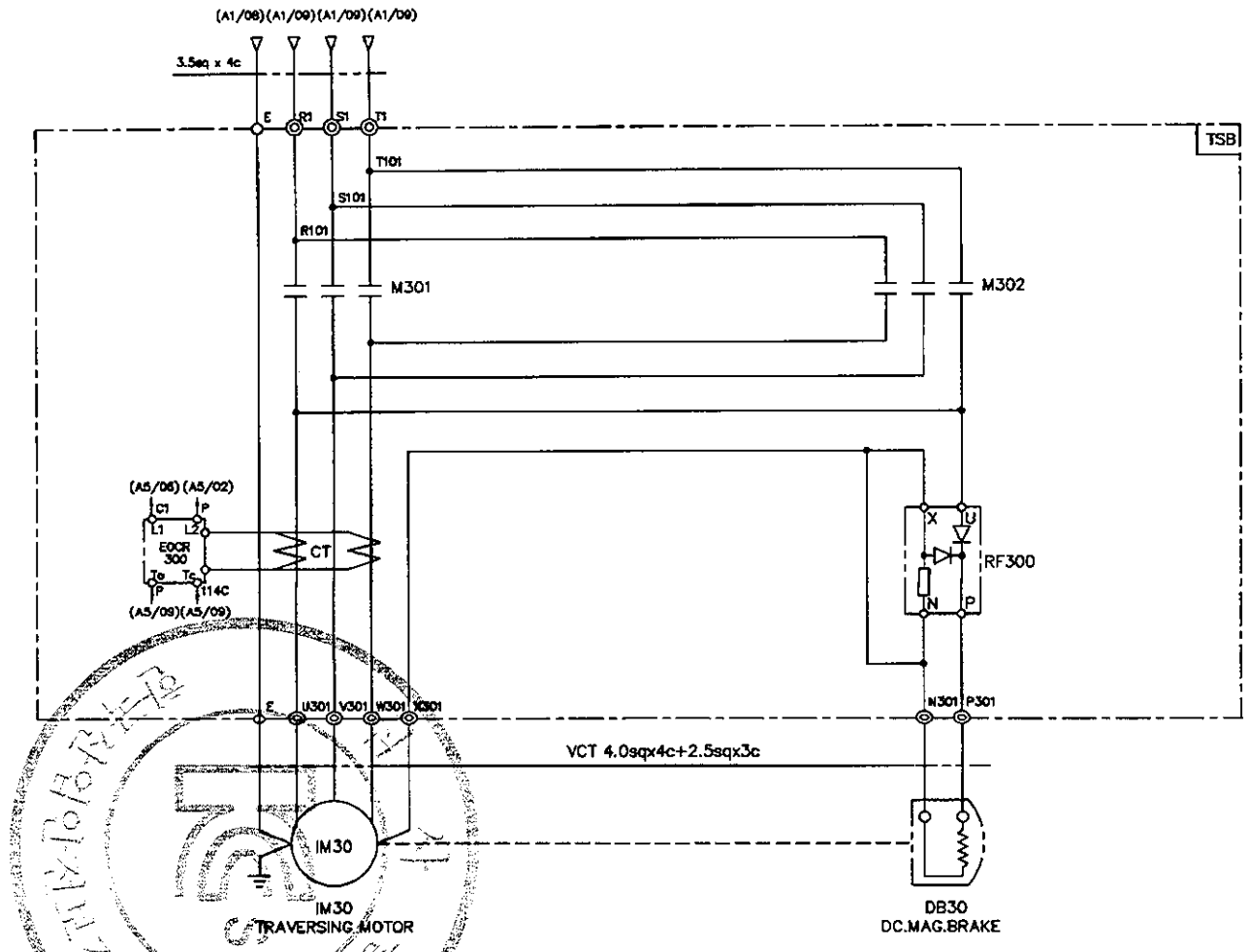

SPECIFICATION / SYMBOLS / DESCRIPTION		TRAVERSING MOTOR	DC MAG' BRAKE	MAGNET CONTACTOR	SILICON RECTIFIER	ELECTRIC OVER CURRENT RELAY	LIMIT SWTCH
		IM 30	DB 30	M301 , M302	RF 300	EOCR 300	LS-301 , LS-302
	460V	0.75KW x 4P AC 3PH 460V 60Hz	DC 100V	DOC-22P AC 110V	SR-30 AC 220V/DC 100V	SS-05	HY - W904
		0.5KW x 6P AC 3PH 460V 60Hz	DC 100V	DOC-22P AC 110V	SR-30 AC 220V/DC 100V	SS-05	HY - W904
SELECTION MAKER		KUK DONG		DEARYUK	ASECO		

MK	DATE	REVISIONS	CHK.	APP.
4				
3				
2				
1				

CUSTOMER		DRAWING	DESIGN	CHECKED	APPROVED	SCALE	DATE	ORDER NO.
DRAWING TITLE	TRAVERSING POWER CONTROL CIRCUIT DIAGRAM					NONE		
		국동호이스트 주식회사 KUK DONG HOIST CO., LTD.				DWG. NO	KDC2E53	

192.168.11.155 / 2011-06-17 15:51:30

1	2	3	4	5	6	7	8	9	10	11	12	13	14	15	16	17	18	19	20

POWER CIRCUIT

TRAVERSING MOTION

ADR'S NO. C2

KDC2E055

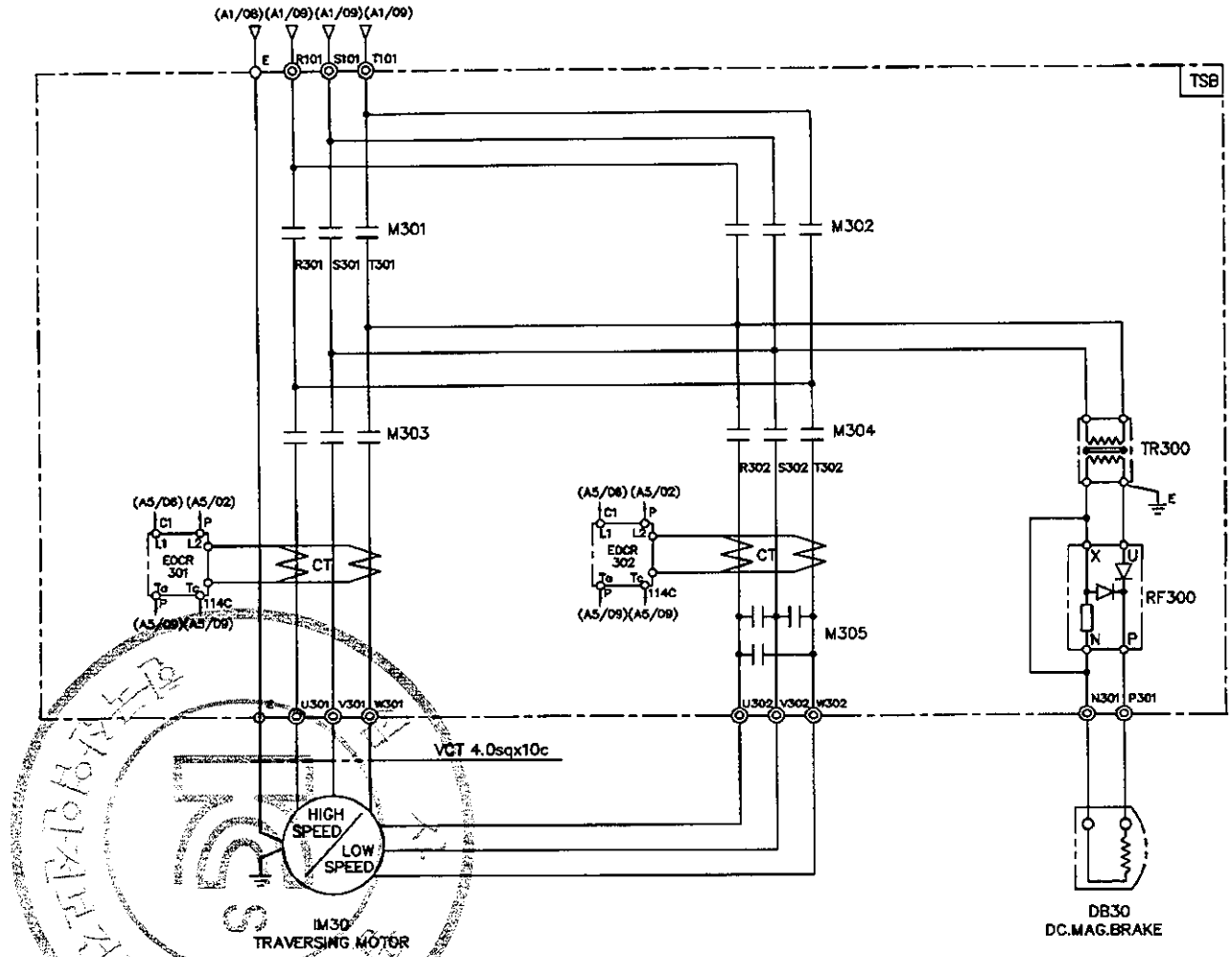

SPECIFICATION / SYMBOLS / DESCRIPTION		TRAVERSING MOTOR	DC MAG' BRAKE	MAGNET CONTACTOR		SILICON RECTIFIER	ELECTRIC OVER CURRENT RELAY	TRANSFORMER
		IM 30	DB30	M301 , M302 , M303	M304 , M305	RF 300	EOCR 301,302	TR300
	460V	0.6/0.4KWx4/8P AC3PH 460V 60Hz	DC 100V	DOC-22P	DOC-22R	SR-30	SS-05	AC460/220V, 300VA
	460V	0.5/0.25KWx6/12P AC3PH 460V 60Hz	DC 100V	DOC-22P	DOC-22R	SR-30	SS-05	AC460/220V, 300VA
SELECTION MAKER		KUK DONG		DEARYUK		ASECO		SHINWHAN

MK	DATE	REVISIONS	CHK.	APP.
4				
3				
2				
1				

CUSTOMER		DRAWING	DESIGN	CHECKED	APPROVED	SCALE	DATE	ORDER NO.
DRAWING TITLE	TRAVERSING POWER CONTROL CIRCUIT DIAGRAM					NONE		
		극동호이스트 주식회사 KUK DONG HOIST CO., LTD.				DWG. NO	KDC2E055	

192.168.11.155 / 2011-06-17 15:51:30

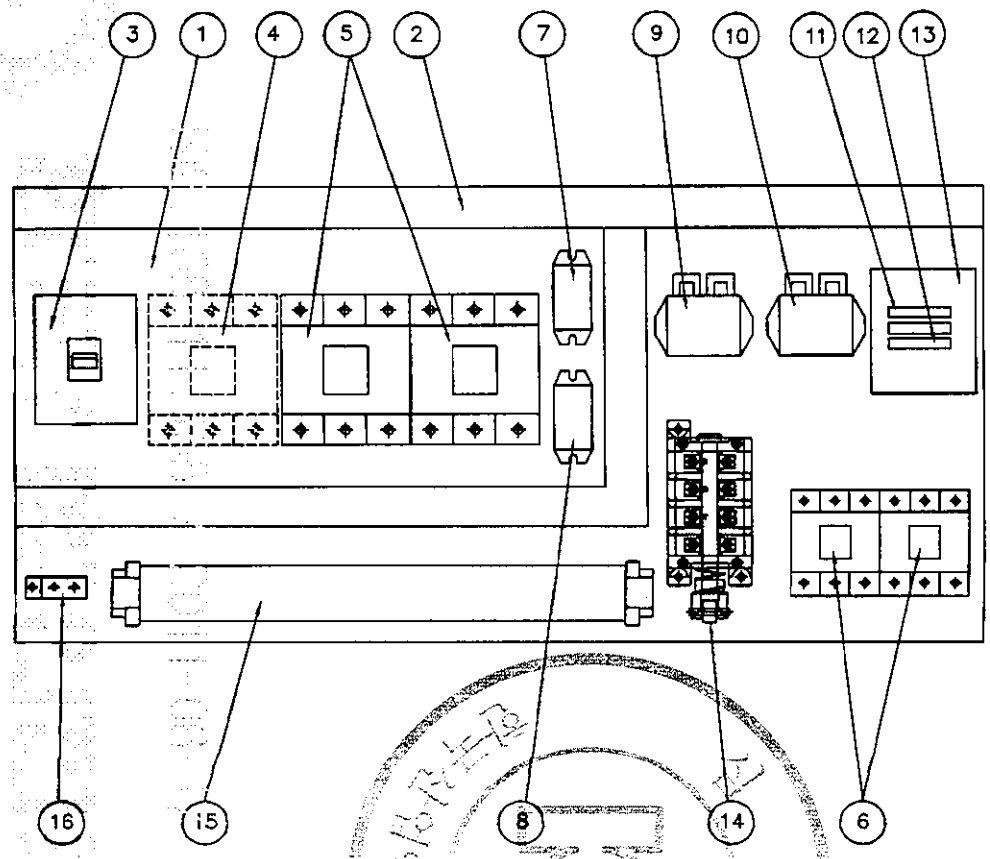

NO	DESCRIPTION	SPECIFICATION	Q'TY	REMARK
1	CHASSIS PLATE		1	아 연 도 금
2	CABLE DUCT	–	1	
3	N.F.B	33AF/15AT	1	HOISTING
4	MAGNET CONTACTOR	DOC–22P	1	MAIN MAG.
5	MAGNET CONTACTOR	DOC–22P	2	HOISTING
6	MAGNET CONTACTOR	DOC–22P	2	CREEP HOIST
7	SILICON RECTIFIER	SR–30	1	HOISTING
8	SILICON RECTIFIER	SR–30	1	CREEP HOIST
9	E.O.C.R	SS–30	1	HOISTING
10	E.O.C.R	SS–05	1	CREEP HOIST
11	FUSE	1 A	2	
12	FUSE	3 A	1	
13	TRANSFORMER	220V/110V(120V), 60VA	1	
14	UPPER LIMITER	AC 600V, 75A	1	LS–1,2
15	TERMINAL BLOCK	60A,15A		
16	EARTH TERMINAL	3tx20x50	1	

NOTE

1. UPPER LIMIT LS–1,LS–2의 접점 허용 전류 용량 : AC 600V, 75A
2. POWER SOURCE : AC. 3ø 480V 60HZ
3. EARTH TERMINAL RESISTANCE : 0.018Ω

NOTE

1. 전선의 색상은 다음과 같다.
   1) 흑색 : 교류 및 직류 전원선로
   2) 적색 : 교류제어선
   3) 주황색 : 외부 전원에서 공급되는 연동장치 제어회로
   4) 녹색 또는 녹색과 황색 혼용 : 접지선
2. CABLE MATERIAL : KIV OR EQUIVALENT
   MIN SIZE : 2.5sq
3. 제어용 전선 : 2.5mm KIV,HIV
4. 제작시 다소 변경 될수있음.
5. 외함 개방구조는 다음과 같을것.
   1) 외함 개방시 충전부분이 차단되도록 할것.
   2) 외함 개방후 충전되어있는 부분은 IP2X 이상의 직접 접촉 방호가 되어있을것.

MK	DATE	REVISIONS	CHK.	APP.
4				
3				
2				
1				

CUSTOMER		DRAWING	DESIGN	CHECKED	APPROVED	SCALE	DATE	ORDER NO.
DRAWING TITLE	CREEP HOIST CONTROL BOX					NONE		
	ARRANGEMENT DRAWING	극동호이스트 주식회사 KUK DONG HOIST CO., LTD.				DWG. NO	KDC2BA61	

ADR'S NO.

192.168.11.155 / 2011-06-17 15:51:30

불법복제 및 배포금지

1	2	3	4	5	6	7	8	9	10	11	12	13	14	15	16	17	18	19	20.

ADR'S NO.

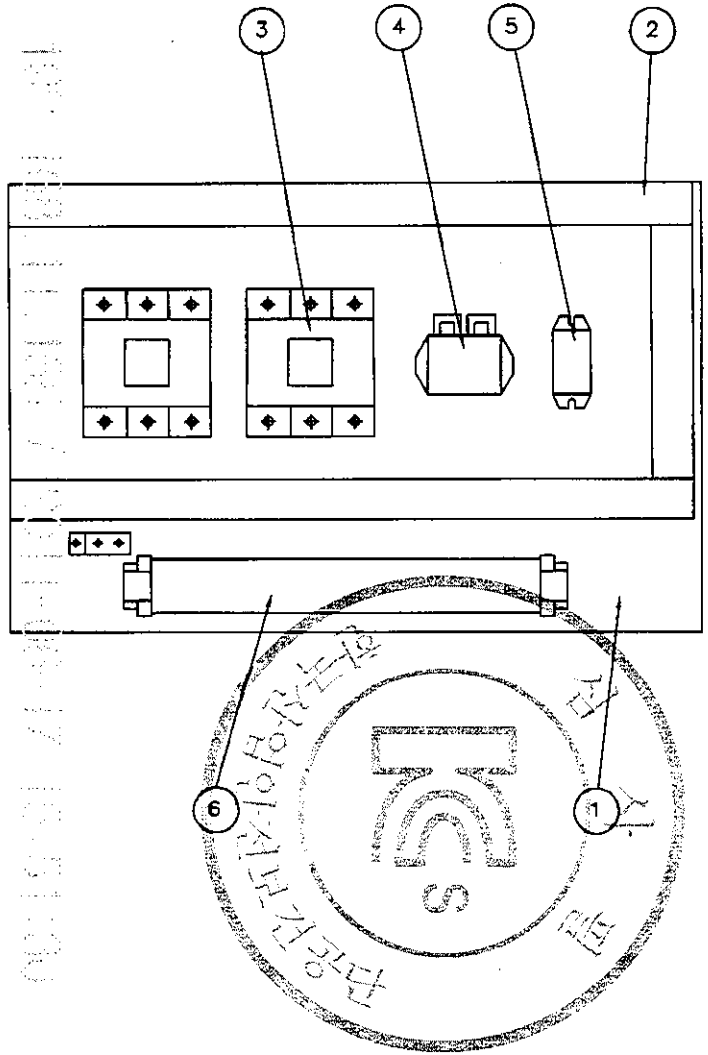

NO	DESCRIPTION	SPEC	Q'TY	REMARK
1	CHASSIS PLATE	–	1	아 연 도 금
2	CABLE DUCT	–	1	
3	MAGNET CONTACTOR	DOC–22P	2	TRAVERSING
4	E.O.C.R	SS–05	1	TRAVERSING
5	SILICON RECTIFIER	SR–30	1	TRAVERSING
6	TERMINAL BLOCK	25A , 15A	1	TRAVERSING

NOTE 1. 전선의 색상은 다음과 같다.
1) 흑색 : 교류 및 직류 전원선로
2) 적색 : 교류제어선
3) 주황색 : 외부 전원에서 공급되는 연동장치 제어회로
4) 녹색 또는 녹색과 황색 혼용 : 접지선
2. CABLE MATERIAL : KIV OR EQUIVALENT
MIN SIZE : 2.5sq
3. 제어용 전선 : 2.5mm KIV,HIV
4. 제작시 다소 변경 될수있음.
5. 외함 개방구조는 다음과 같을것.
1) 외함 개방시 충전부분이 차단되도록 할것.
2) 외함 개방후 충전되어있는 부분은 IP2X 이상의 직접 접촉 방호가 되어있을것.

MK	DATE	REVISIONS	CHK.	APP.
4				
3				
2				
1				

CUSTOMER	
DRAWING TITLE	TRAVERSING POWER CONTROL BOX ARRANGEMENT DRAWING

DRAWING	DESIGN	CHECKED	APPROVED	SCALE	DATE	ORDER NO.
				NONE		

KD 극동호이스트 주식회사
KUK DONG HOIST CO., LTD.

DWG. NO KDC2bt62

192.168.11.155 / 2011-06-17 15:51:30

불법복제 및 배포금지

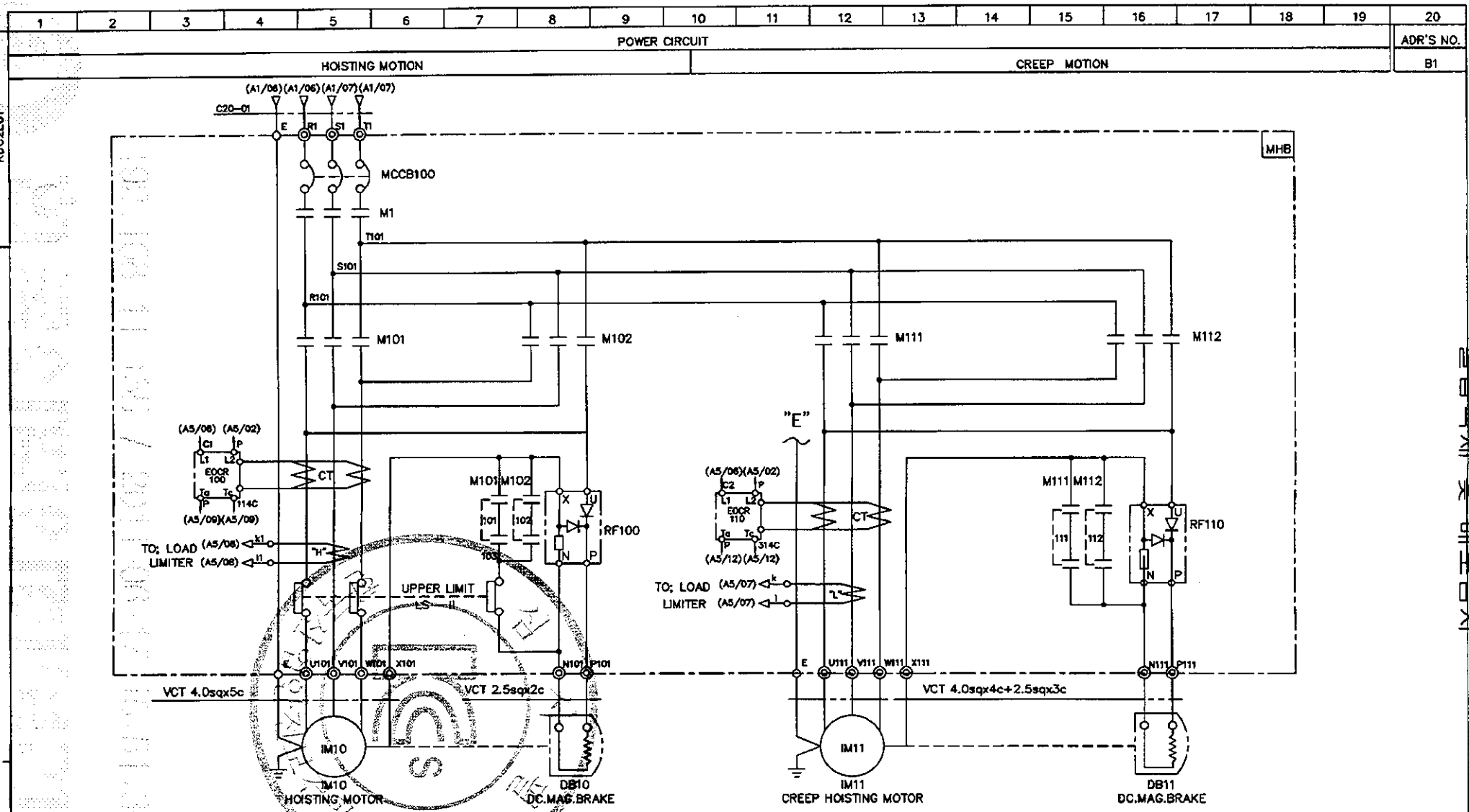

SPECIFICATION / SYMBOLS / DESCRIPTION	HOISTING POWER	HOISTING MOTOR	CREEP MOTOR	DC.MAG BRAKE	NO FUSE BREAKER	TRANSFORMER	FUSE		MAIN CONTACTOR	MAGNET CONTACTOR		UPPER LIMIT	ELECTRIC OVER CURRENT RELAY		SILICON RECTIFIER		LOAD LIMITER	CABLE
	HOIST	IM 10	IM 11	DB10, 11	MCCB100	TR 1	F11,F12	F13	M1	M101,M102	M111,M112	LS-I, LS-II	EOCR100	EOCR110	RF100	RF110	LOAD LIMITER	C20-01
	2TON AC 3PH 480V 60Hz	3.7KWx4P	0.4KW x 4P	DC 100V	DBE-33AF/15AT	480/110,120V,60VA	1A	2A	DOC-22P	DOC-40P	DOC-22P	AC 600V 75A	SS-30	SS-05	SR-30	SR-30	JDL-100	VCTF 4.0sqx4c
SELECTION MAKER	KUK DONG				DEARYUK	SHINWHAN	–		DEARYUK			KUK DONG	ASECO				JEUNGHO	DONGIL

MK	DATE	REVISIONS	CHK.	APP.
4				
3				
2				
1				

CUSTOMER		DRAWING	DESIGN	CHECKED	APPROVED	SCALE	DATE	ORDER NO.
DRAWING TITLE	CREEP HOISTING POWER CONTROL CIRCUIT DIAGRAM (FOR CRANE)					NONE		
		국동호이스트 주식회사 KUK DONG HOIST CO., LTD.				DWG. NO	KDC2E61	

192.168.11.155 / 2011-06-17 15:51:30

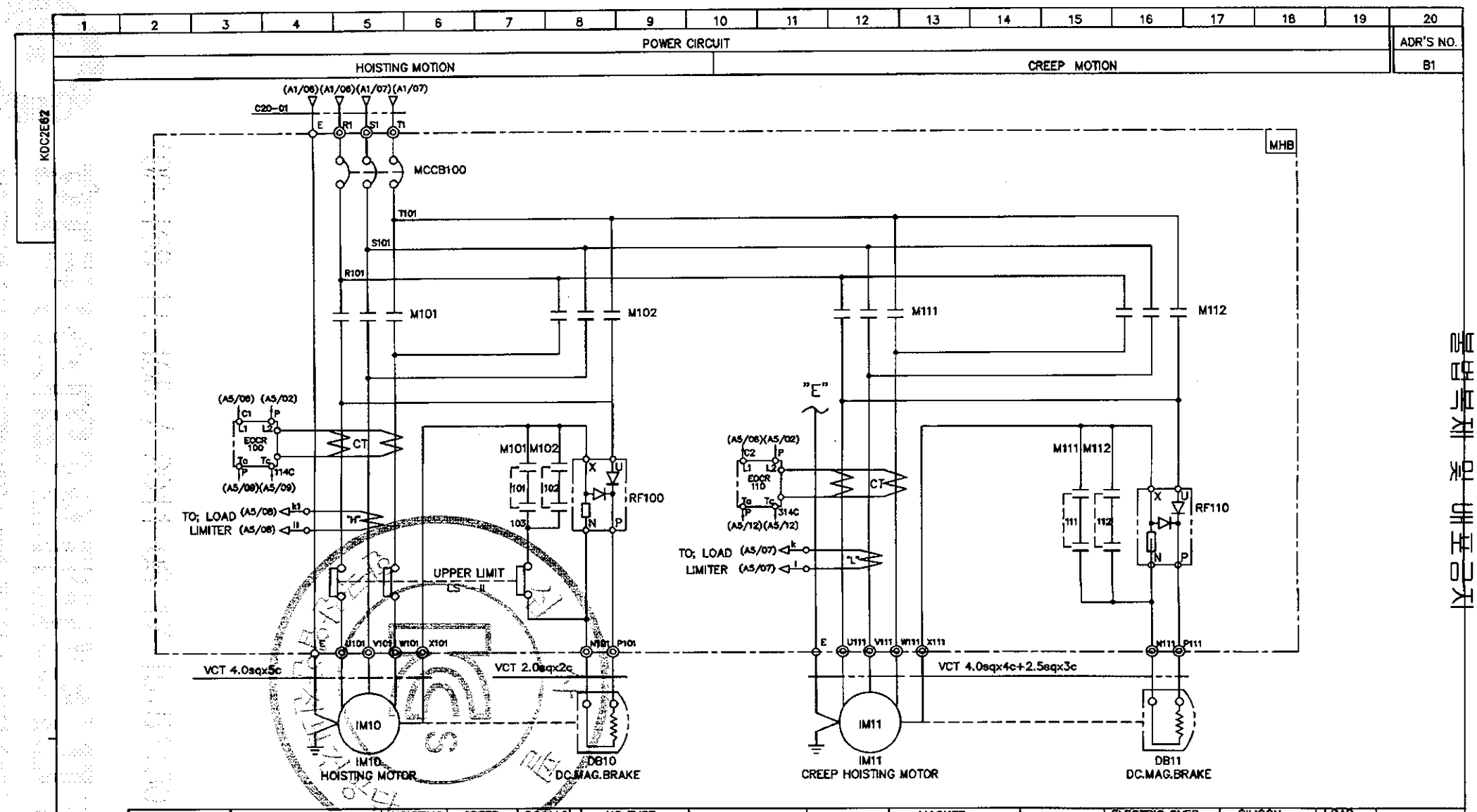

SPECIFICATION / SYMBOLS / DESCRIPTION	HOISTING POWER	HOISTING MOTOR	CREEP MOTOR	DC.MAG BRAKE	NO FUSE BREAKER	TRANSFORMER	FUSE		MAGNET CONTACTOR		UPPER LIMIT	ELECTRIC OVER CURRENT RELAY		SILICON RECTIFIER		LOAD LIMITER	CABLE
	HOIST	IM 10	IM 11	DB10, 11	MCCB100	TR 1	F11,F12	F13	M101,M102	M111,M112	LS-I, LS-II	EOCR100	EOCR110	RF100	RF110	LOAD LIMITER	C20-01
	2TON AC 3PH 480V 60Hz	3.7KWx4P	0.4KW x 4P	DC 100V	DBE-33AF/15AT	480/110,120V,60VA	1A	2A	DOC-40P	DOC-22P	AC 600V 75A	SS-30	SS-05	SR-30	SR-30	JDL-100	VCTF 4.0sqx4c
SELECTION / MAKER	KUK DONG				DEARYUK	SHINWHAN	–		DEARYUK		KUK DONG	ASECO				JEUNGHO	DONGIL

MK	DATE	REVISIONS	CHK.	APP.

CUSTOMER		DRAWING	DESIGN	CHECKED	APPROVED	SCALE	DATE	ORDER NO.
DRAWING TITLE	CREEP HOISTING POWER CONTROL CIRCUIT DIAGRAM (FOR CRANE)					NONE		
		국동호이스트 주식회사 KUK DONG HOIST CO., LTD.				DWG. NO	KDC2E62	

192.168.11.155 / 2011-06-17 15:51:30

1	2	3	4	5	6	7	8	9	10	11	12	13	14	15	16	17	18	19	20

POWER CIRCUIT

TRAVERSING MOTION

ADR'S NO. C1

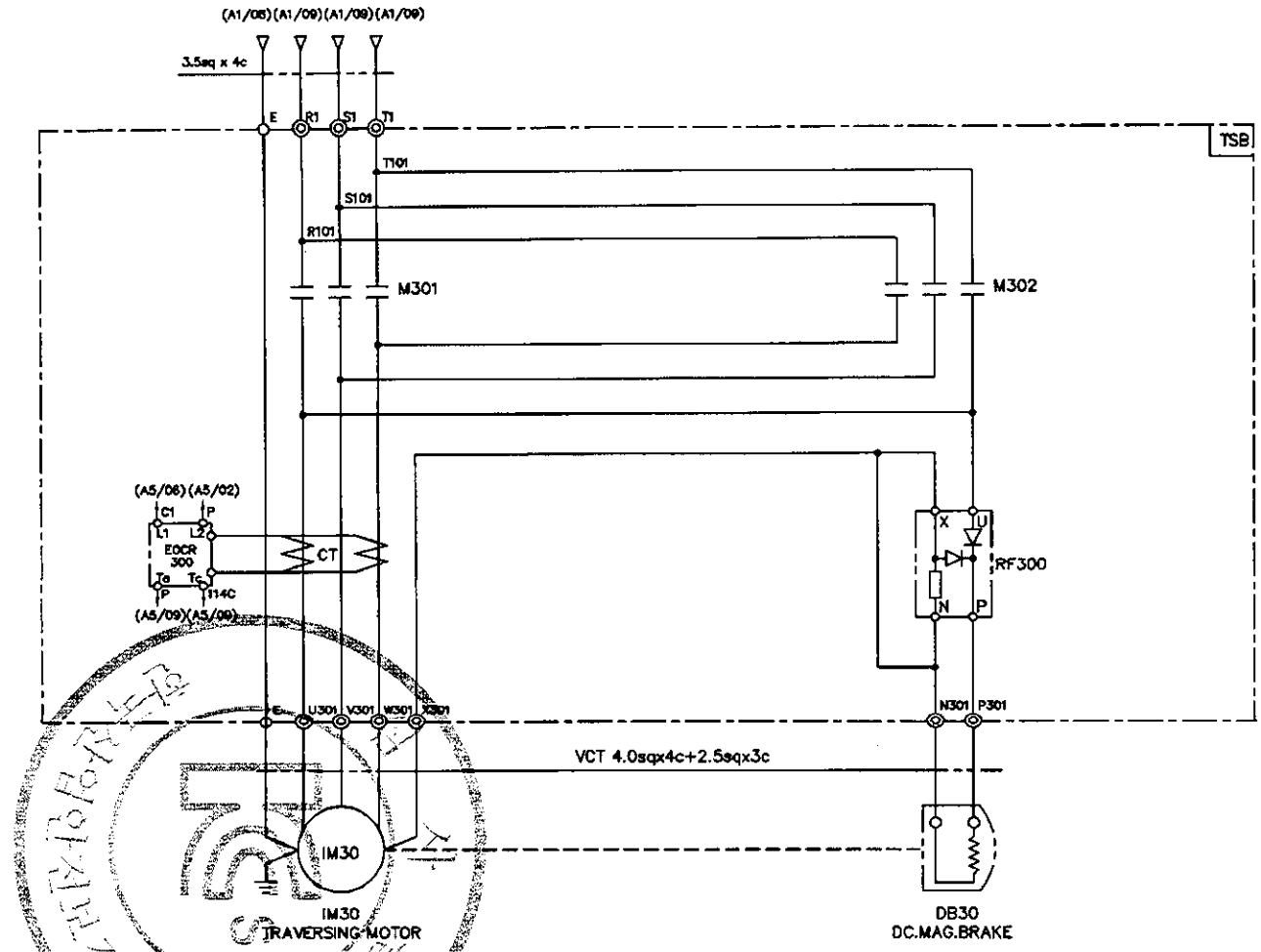

SPECIFICATION / SYMBOLS / DESCRIPTION		TRAVERSING MOTOR	DC MAG' BRAKE	MAGNET CONTACTOR	SILICON RECTIFIER	ELECTRIC OVER CURRENT RELAY	LIMIT SWTCH
		IM 30	DB 30	M301 , M302	RF 300	EOCR 300	LS-301 , LS-302
	480V	0.75KW x 4P AC 3PH 480V 60Hz	DC 100V	DOC-22P AC 110V	SR-30 AC 220V/DC 100V	SS-05	HY - W904
		0.5KW x 6P AC 3PH 480V 60Hz	DC 100V	DOC-22P AC 110V	SR-30 AC 220V/DC 100V	SS-05	HY - W904
SELECTION MAKER		KUK DONG		DEARYUK	ASECO		

MK	DATE	REVISIONS	CHK.	APP.
4				
3				
2				
1				

CUSTOMER		DRAWING	DESIGN	CHECKED	APPROVED	SCALE	DATE	ORDER NO.
DRAWING TITLE	TRAVERSING POWER CONTROL CIRCUIT DIAGRAM					NONE		
		극동호이스트 주식회사 KUK DONG HOIST CO., LTD.				DWG. NO	KDC2E63	

KDC2E63

192.168.11.155 / 2011-06-17 15:51:30

1	2	3	4	5	6	7	8	9	10	11	12	13	14	15	16	17	18	19	20

POWER CIRCUIT

TRAVERSING MOTION

ADR'S NO. C2

KDC2E065

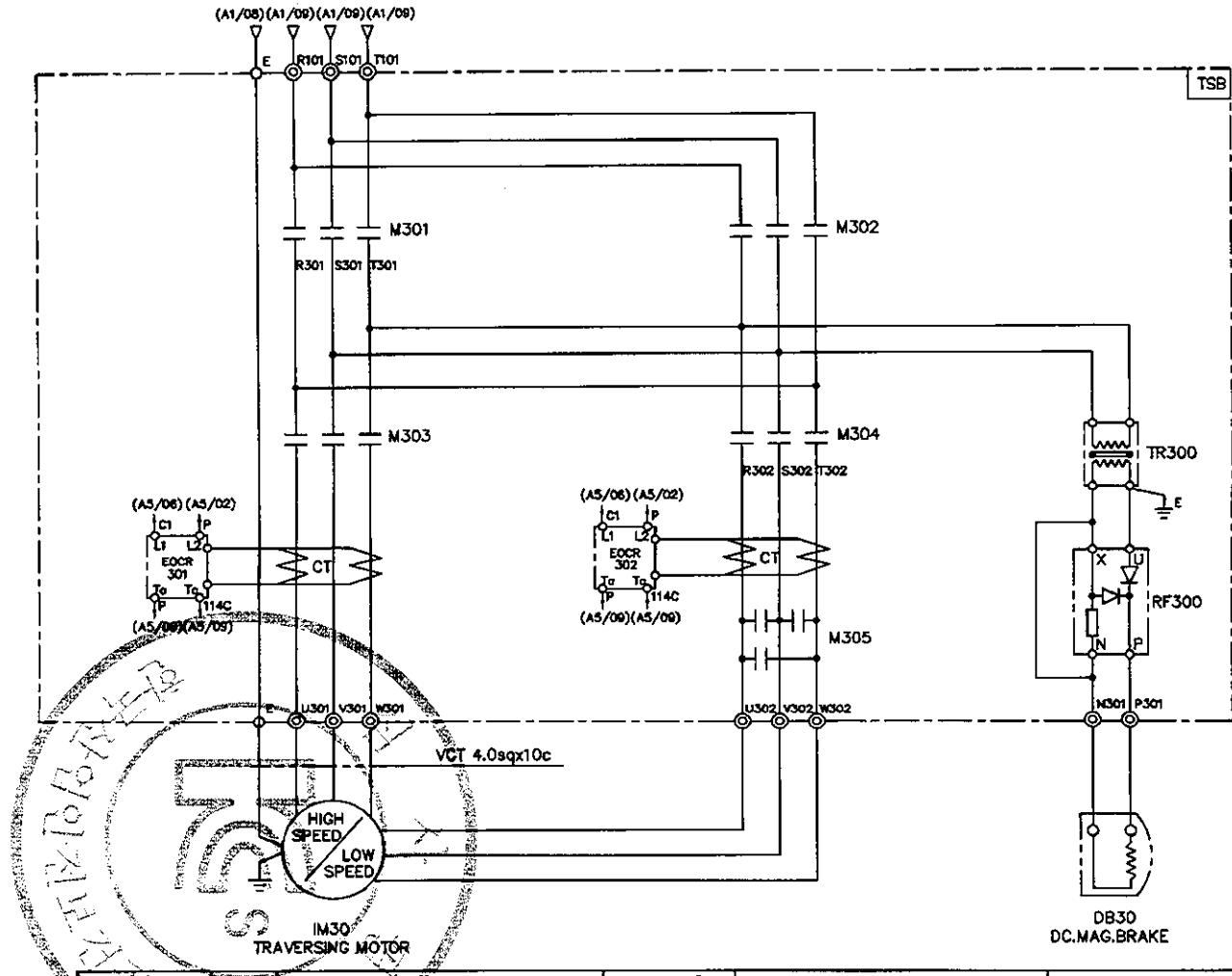

SPECIFICATION / SYMBOLS / DESCRIPTION		TRAVERSING MOTOR	DC MAG' BRAKE	MAGNET CONTACTOR		SILICON RECTIFIER	ELECTRIC OVER CURRENT RELAY	TRANSFORMER
		IM 30	DB30	M301 , M302 , M303	M304 , M305	RF 300	EOCR 301,302	TR300
	480V	0.8/0.4KWx4/8P AC3PH 480V 60Hz	DC 100V	DOC-22P	DOC-22R	SR-30	SS-05	AC480/220V, 300VA
	480V	0.5/0.25KWx6/12P AC3PH 480V 60Hz	DC 100V	DOC-22P	DOC-22R	SR-30	SS-05	AC480/220V, 300VA
SELECTION MAKER		KUK DONG		DEARYUK		ASECO		SHINWHAN

MK	DATE	REVISIONS	CHK.	APP.
4				
3				
2				
1				

CUSTOMER		DRAWING	DESIGN	CHECKED	APPROVED	SCALE	DATE	ORDER NO.
DRAWING TITLE	TRAVERSING POWER CONTROL CIRCUIT DIAGRAM					NONE		
		극동호이스트 주식회사 KUK DONG HOIST CO., LTD.				DWG. NO	KDC2E065	

192.168.11.155 / 2011-06-17 15:51:30

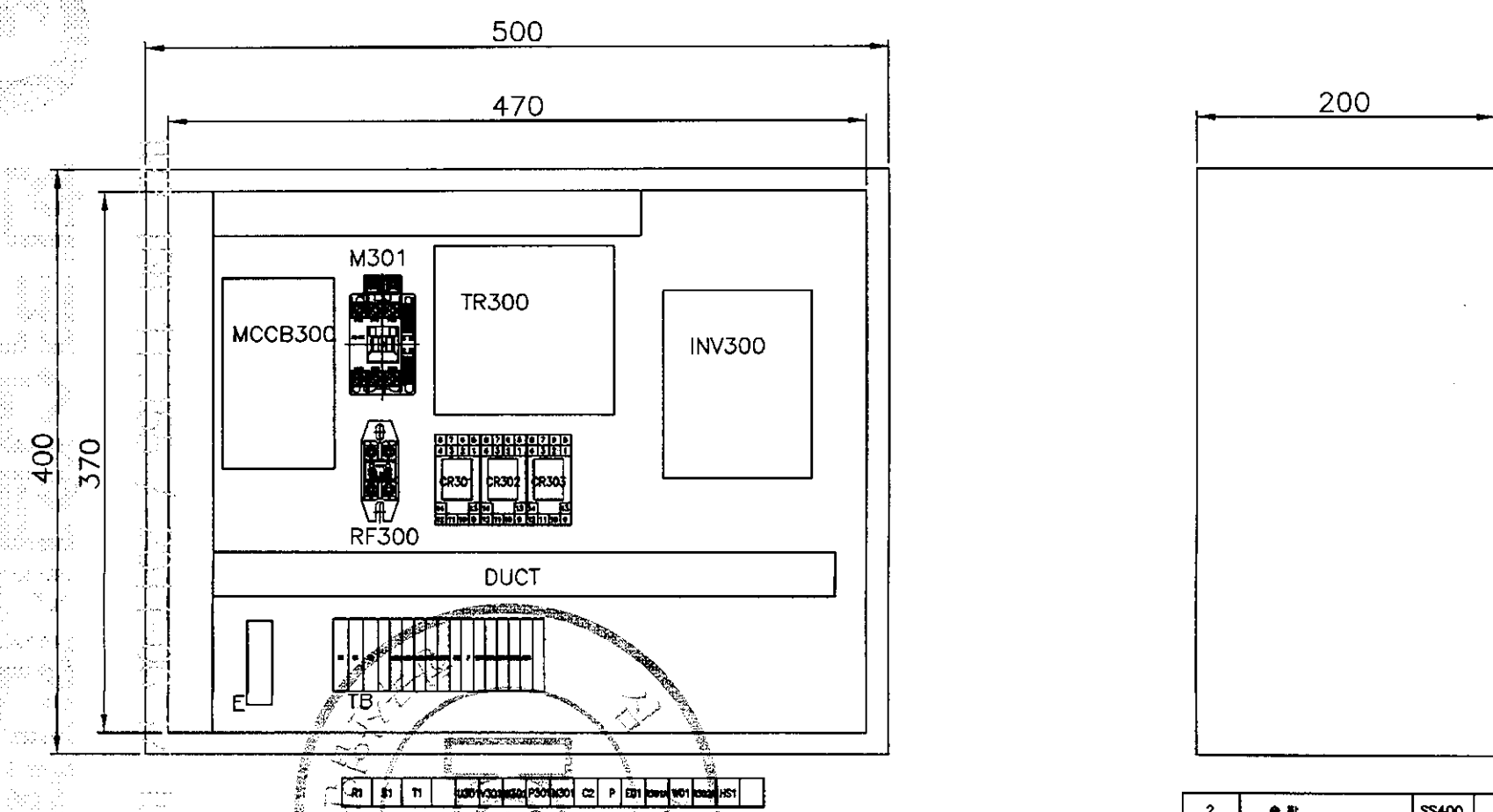

NO.	DESCRIPTION	MT'L	SUB	TOTAL	SUB	TOTAL	REMARKS.
2	속 판	SS400		1			
1	T/S BOX	PUR		1			
			QT'Y		WEIGHT(Kg)		

11	EARTH BUS BAR	PUR		1			
10	DUCT	PUR		1			
9	TERMINAL BLOCK	PUR		1			
8	INVERTER	PUR		1			
7	TR	PUR		1			
6	RELAY & SCOKET	PUR		1			
5	RF	PUR		1			
4	MC	PUR		1			
3	MCCB	PUR		1			

PROJECT		DATE	DIM
			mm
TITLE	T/S CONTROL PANEL(INVERTER)	SCALE	PROJECTION
		A3/3	3rd

DRAWN	DESIGNED	CHECKED	APPROVED	REF. DRAWING

극동호이스트 주식회사
KUK DONG HOIST CO., LTD.

SHEET No.

DWG No. KD2EI001

192.168.11.155 / 2011-06-17 15:51:30

1	2	3	4	5	6	7	8	9	10	11	12	13	14	15	16	17	18	19	20

TRAVERSING MOTION

ADR'S NO.

POWER CIRCUIT DIAGRAM

CONTROL CIRCUIT DIAGRAM

BRAKE | EAST | WEST | HIGH SPEED

KD2EI002

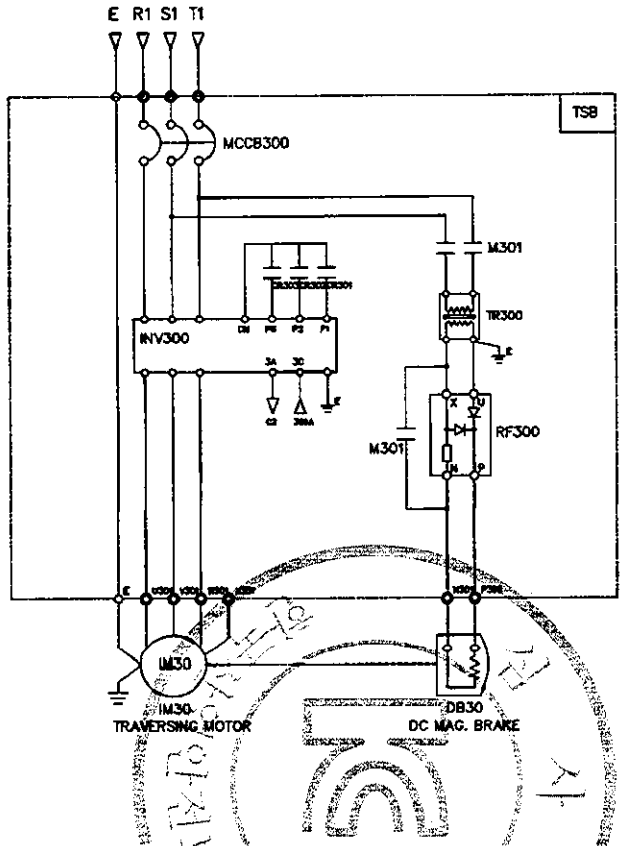

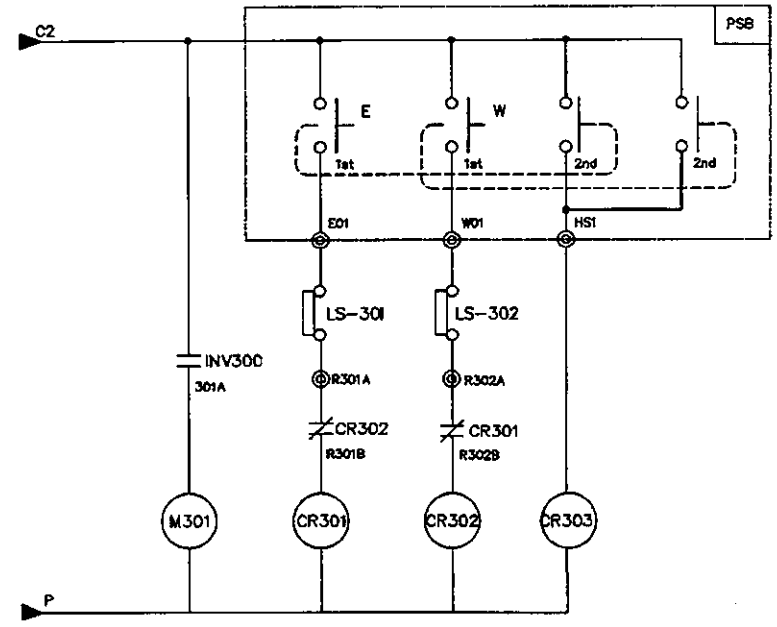

SPECIFICATION / SYMBOLS / DESCRIPTION	TRAVERSING POWER	TRAVERSING MOTOR	DC MAG BRAKE	NO FUSE BREAKER	TRANSFORMER	BRAKE MAGNET	CONTROL RELAY	INVERTER	SILICON RECTIFIER
		IM 30	DB30	MCCB300	TR 300	M301	CR301,302,303	INV300	RF300
	AC 3PH 220V 60Hz	0.75KW x 4P	DC 100V	DBE-33AF/20AT	220/220V,300VA	DM-22C	MINI 4a4b(Coil AC110V)	SV015iG5A-2	SR-30
	AC 3PH 380(440,460,480)V 60Hz	0.75KW x 4P	DC 100V	DBE-33AF/20AT	380(440,460,480)/220V,300VA	DM-22C	MINI 4a4b(Coil AC110V)	SV015iG5A-4	SR-30
	AC 3PH 220V 60Hz	0.5KW x 6P	DC 100V	DBE-33AF/20AT	220/220V,300VA	DM-22C	MINI 4a4b(Coil AC110V)	SV015iG5A-2	SR-30
	AC 3PH 380(440,460,480)V 60Hz	0.5KW x 6P	DC 100V	DBE-33AF/20AT	380(440,460,480)/220V,300VA	DM-22C	MINI 4a4b(Coil AC110V)	SV015iG5A-4	SR-30
SELECTION MAKER	KUK DONG HOIST							LS	ASAN

MK	DATE	REVISIONS	CHK.	APP.
4				
3				
2				
1				

CUSTOMER	INVERTER CONTROL
DRAWING TITLE	TRAVERSING POWER & CONTROL CIRCUIT DIAGRAM

DRAWING	DESIGN	CHECKED	APPROVED	SCALE	DATE	ORDER NO.

KD 국동호이스트 주식회사 KUK DONG HOIST CO., LTD.

DWG. NO KD2EI002

192.168.11.155 / 2011-06-17 15:51:30

1	2	3	4	5	6	7	8	9	10	11	12	13	14	15	16	17	18	19	20.
CONTROL CIRCUIT																			ADR'S NO.
EM, STOP					LOAD LIMIT			UPPER LIMIT	CREEP UP	UP	CREEP DOWN		DOWN	EAST		WEST			A5

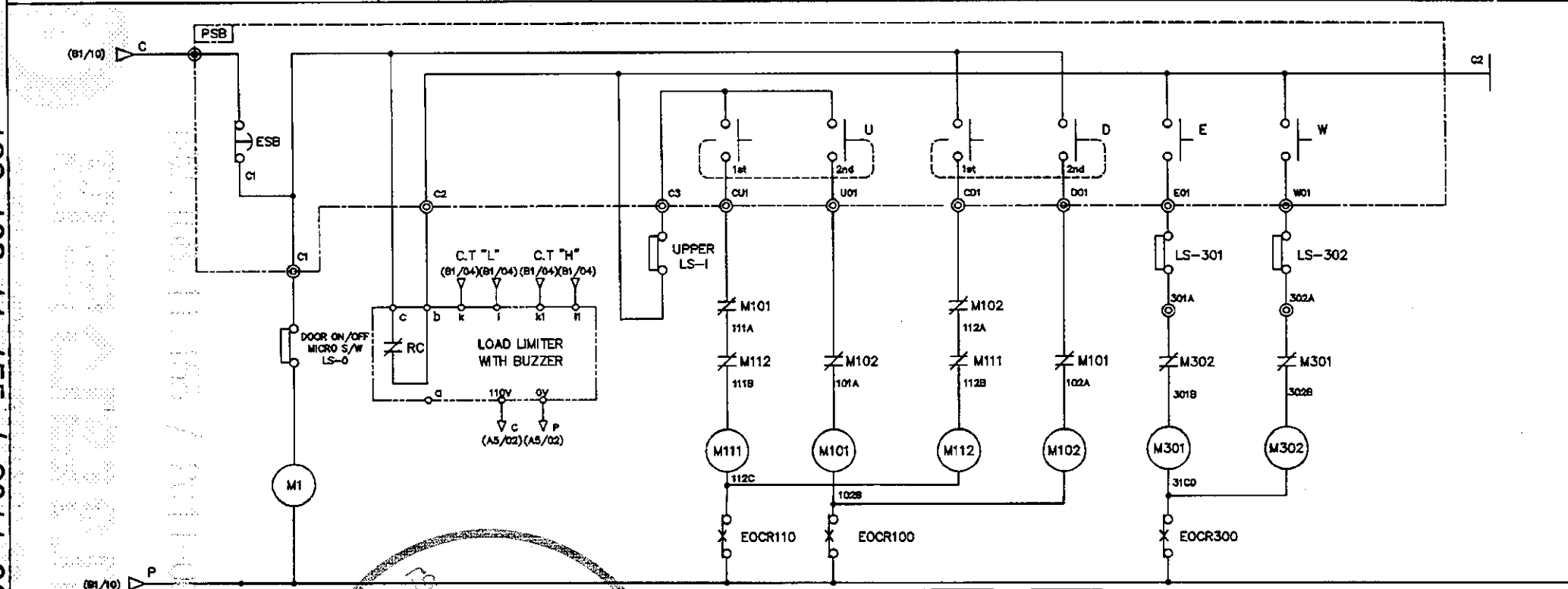

M1	
A	B1/05
A	B1/05
A	B1/05
a	
a	
b	
b	

M111	
A	B1/12
A	B1/12
A	B1/12
a	B1/15
a	B1/15
b	A5/13
b	

M101	
A	B1/05
A	B1/05
A	B1/05
a	B1/07
a	B1/07
b	A5/10
b	A5/14

M112	
A	B1/16
A	B1/16
A	B1/16
a	B1/16
a	B1/16
b	A5/10
b	

M102	
A	B1/08
A	B1/08
A	B1/08
a	B1/08
a	B1/08
b	A5/11
b	A5/13

M301	
A	C1/07
A	C1/07
A	C1/07
a	
a	
b	A5/17
b	

M302	
A	C1/13
A	C1/13
A	C1/13
a	
a	
b	A5/15
b	

SPECIFICATION / SYMBOLS / DESCRIPTION	UPPER LIMIT	PENDANT P.B S/W	LOAD LIMITER	LIMIT SWITCH
	LS-1	E.S.B	LOAD LIMITER	LS-301,302
	AC 600V 75A	250V 3A	JDL-70	HY - W904
	AC 600V 3A	250V 3A	JDL-70	HY - W904
MAKER	KUKDONG	KGAUTO	JEUNGHO	HANYOUNG

MK	DATE	REVISIONS	CHK.	APP.

CUSTOMER		DRAWING	DESIGN	CHECKED	APPROVED	SCALE	DATE	ORDER NO.
DRAWING TITLE	MAIN POWER 2 & CONTROL CIRCUIT DIAGRAM					NONE		
		국동호이스트 주식회사 KUK DONG HOIST CO., LTD.				DWG. NO	KDC2E001	

192.168.11.155 / 2011-06-17 15:51:30

불법 복제 및 배포 금지

1	2	3	4	5	6	7	8	9	10	11	12	13	14	15	16	17	18	19	20.
CONTROL CIRCUIT																			ADR'S NO.
EM. STOP				LOAD LIMIT			UPPER LIMIT	CREEP UP		UP	CREEP DOWN		DOWN	EAST	WEST	SOUTH		NORTH	A5

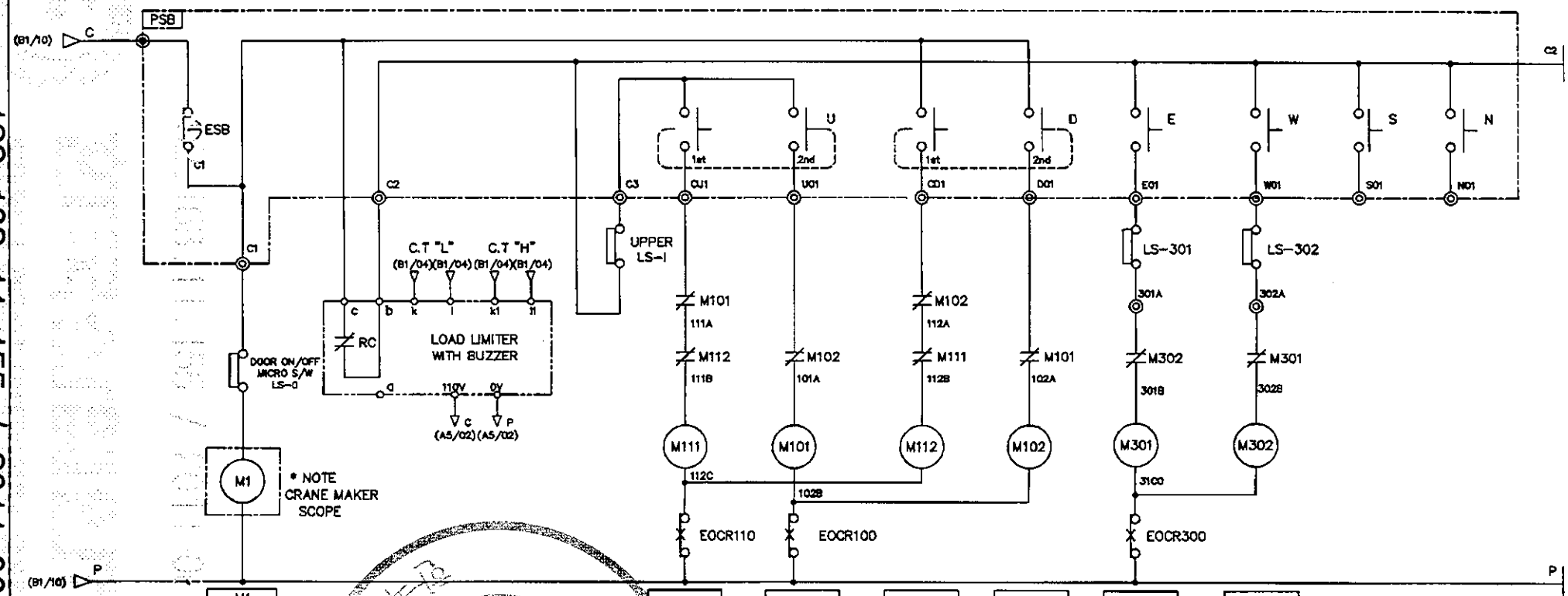

M1	
A	B1/05
A	B1/05
A	B1/05
a	
a	
b	
b	

M111	
A	B1/12
A	B1/12
A	B1/12
a	B1/15
a	B1/15
b	A5/12
b	

M101	
A	B1/05
A	B1/05
A	B1/05
a	B1/07
a	B1/07
b	A5/09
b	A5/13

M112	
A	B1/16
A	B1/16
A	B1/16
a	B1/16
a	B1/16
b	A5/09
b	

M102	
A	B1/08
A	B1/08
A	B1/08
a	B1/08
a	B1/08
b	A5/10
b	A5/12

M301	
A	C1/07
A	C1/07
A	C1/07
a	
a	
b	A5/16
b	

M302	
A	C1/13
A	C1/13
A	C1/13
a	
a	
b	A5/15
b	

SPECIFICATION / SYMBOLS / DESCRIPTION	UPPER LIMIT	PENDANT P.B S/W	LOAD LIMITER	LIMIT SWITCH
	LS-1	E.S.B	LOAD LIMITER	LS-301,302
	AC 600V 75A	250V 3A	JDLS-70	HY - W904
	AC 600V 3A	250V 3A	JDLS-70	HY - W904
MAKER	KUKDONG	KGAUTO	JEUNGHO	HANYOUNG

MK	DATE	REVISIONS	CHK.	APP.
4				
3				
2				
1				

CUSTOMER	
DRAWING TITLE	MAIN POWER 2 & CONTROL CIRCUIT DIAGRAM

DRAWING	DESIGN	CHECKED	APPROVED	SCALE	DATE	ORDER NO.
				NONE		

KD 극동호이스트 주식회사 KUK DONG HOIST CO., LTD.

DWG. NO KDC2E002

192.168.11.155 / 2011-06-17 15:51:30

불법복제 및 배포금지

1	2	3	4	5	6	7	8	9	10	11	12	13	14	15	16	17	18	19	20.
CONTROL CIRCUIT																			ADR'S NO.
EM.STOP	LOAD LIMIT				CREEP UP	UP	CREEP DOWN	DOWN	EAST-LOW			WEST-LOW			HIGH SPEED				A5

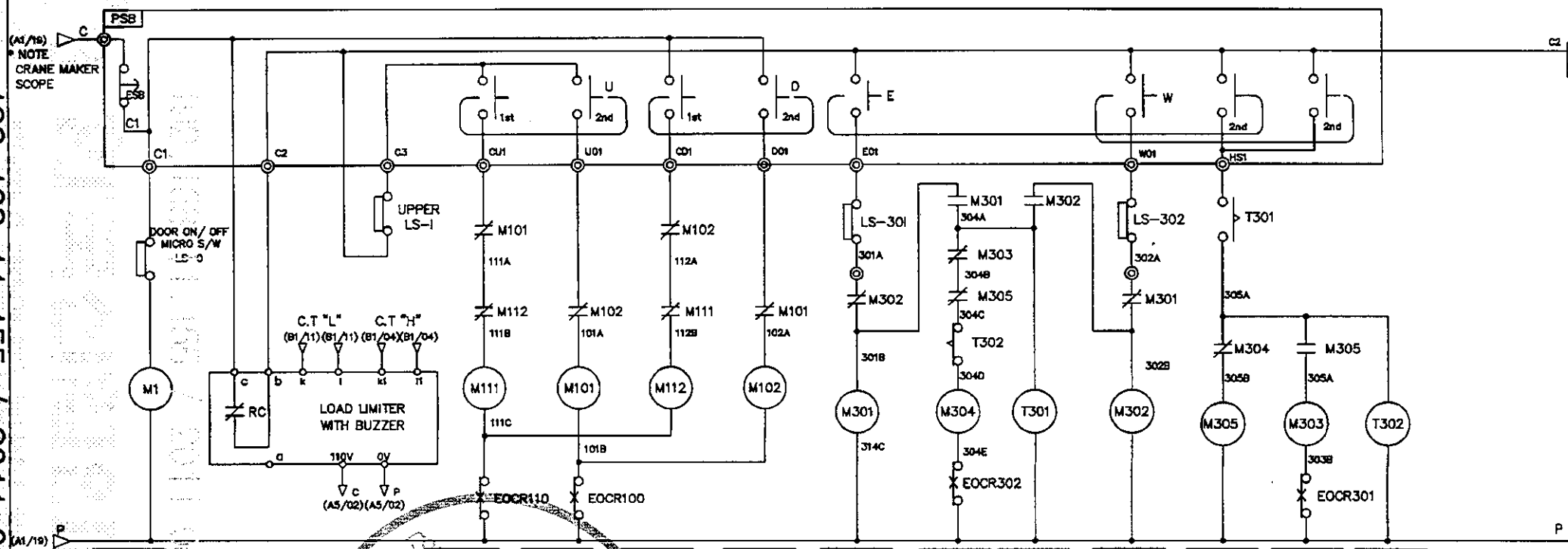

M1	
A	B1/05
A	B1/05
A	B1/05
a	
a	
b	
b	

M111	
A	B1/12
A	B1/12
A	B1/12
a	B1/15
a	B1/15
b	A5/09
b	

M101	
A	B1/05
A	B1/05
A	B1/05
a	B1/07
a	B1/07
b	A5/07
b	A5/10

M112	
A	B1/16
A	B1/16
A	B1/16
a	B1/16
a	B1/16
b	A5/07
b	

M102	
A	B1/08
A	B1/08
A	B1/08
a	B1/08
a	B1/08
b	A5/08
b	A5/09

M301	
A	C1/07
A	C1/07
A	C1/08
a	A5/13
a	
b	A5/14
b	

M304	
A	C2/11
A	C2/12
A	C2/12
a	
a	
b	A5/15
b	

T301	
a	A5/16
a	
b	
b	

M302	
A	C1/13
A	C1/13
A	C1/13
a	A5/14
a	
b	A5/11
b	

M305	
A	C2/11
A	C2/12
A	C2/12
a	A5/17
a	
b	A5/13
b	

M303	
A	C2/07
A	C2/07
A	C2/07
a	
a	
b	A5/13
b	

T302	
a	
a	
b	A5/13
b	

SPECIFICATION / SYMBOLS / DESCRIPTION	UPPER LIMIT	PENDANT P.B S/W	LOAD LIMITER	LIMIT SWITCH
	LS-1	E.S.B	LOAD LIMITER	LS-301,302
	AC 600V 75A	250V 3A	JDL-100	HY - M904
	AC 600V 3A	250V 3A	JDL-100	HY - M904
MAKER	KUKDONG	KGAUTO	JEUNGHO	HANYOUNG

MK	DATE	REVISIONS	CHK.	APP.
4				
3				
2				
1				

CUSTOMER	
DRAWING TITLE	HOIST CONTROL CIRCUIT DIAGRAM

DRAWING	DESIGN	CHECKED	APPROVED	SCALE	DATE	ORDER NO.
				NONE		

KD 극동호이스트 주식회사 KUK DONG HOIST CO., LTD.

DWG. NO KDC2E003

192.168.11.155 / 2011-06-17 15:51:30

1	2	3	4	5	6	7	8	9	10	11	12	13	14	15	16	17	18	19	20.
CONTROL CIRCUIT																			ADR'S NO.
EM.STOP	LOAD LIMIT				CREEP UP		UP	CREEP DOWN	DOWN	EAST-LOW			WEST-LOW		HIGH SPEED		SOUTH	NORTH	A5

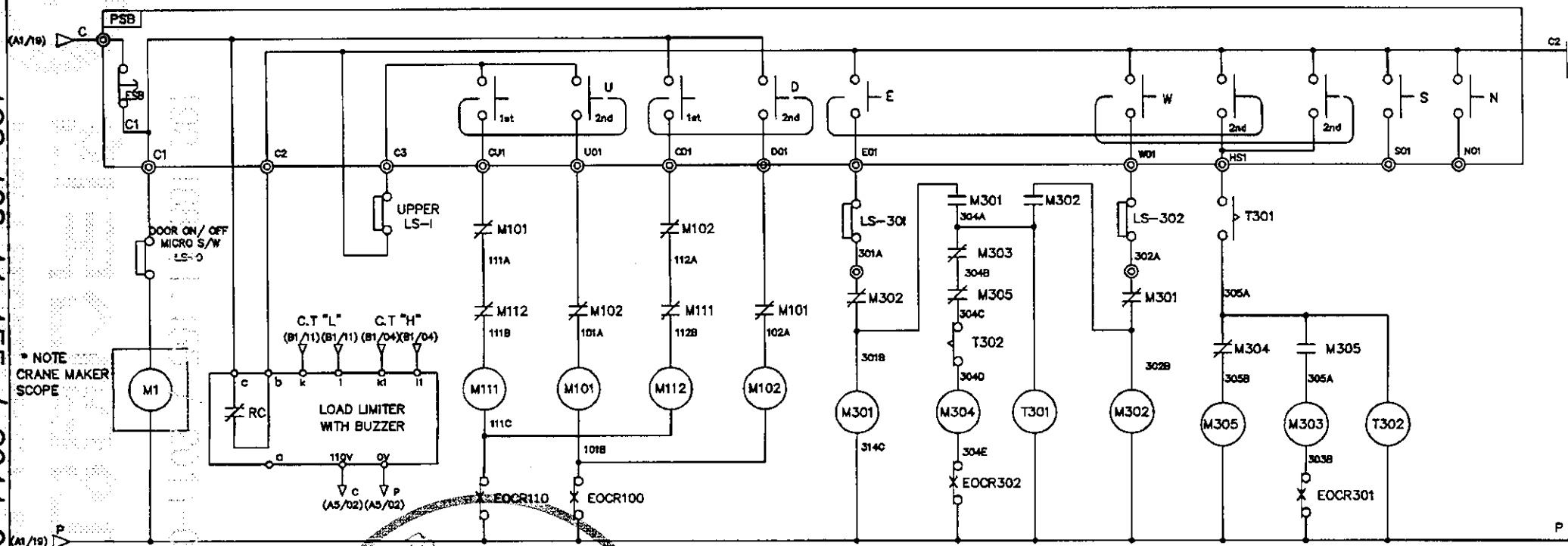

M1	
A	B1/05
A	B1/05
A	B1/05
a	
a	
b	
b	

M111	
A	B1/12
A	B1/12
A	B1/12
a	B1/15
a	B1/15
b	A5/09
b	

M101	
A	B1/05
A	B1/05
A	B1/05
a	B1/07
a	B1/07
b	A5/07
b	A5/10

M112	
A	B1/16
A	B1/16
A	B1/16
a	B1/16
a	B1/16
b	A5/07
b	

M102	
A	B1/08
A	B1/08
A	B1/08
a	B1/08
a	B1/08
b	A5/08
b	A5/09

M301	
A	C1/07
A	C1/07
A	D1/08
a	A5/13
a	
b	A5/15
b	

M304	
A	C2/11
A	C2/12
A	C2/12
a	
a	
b	A5/16
b	

T301	
a	A5/16
a	
b	
b	

M302	
A	C1/13
A	C1/13
A	C1/13
a	A5/14
a	
b	A5/11
b	

M305	
A	C2/11
A	C2/12
A	C2/12
a	A5/17
a	
b	A5/13
b	

M303	
A	C2/07
A	C2/07
A	C2/07
a	
a	
b	A5/13
b	

T302	
a	
a	
b	A5/13
b	

SPECIFICATION / SYMBOLS / DESCRIPTION	UPPER LIMIT	PENDANT P.B S/W	LOAD LIMITER	LIMIT SWITCH
	LS-1	E.S.B	LOAD LIMITER	LS-301,302
	AC 600V 75A	250V 3A	JDL-100	HY - M904
	AC 600V 3A	250V 3A	JDL-100	HY - M904
MAKER	KUKDONG	KGAUTO	JEUNGHO	HANYOUNG

MK	DATE	REVISIONS	CHK.	APP.

CUSTOMER		DRAWING	DESIGN	CHECKED	APPROVED	SCALE	DATE	ORDER NO.
DRAWING TITLE	HOIST CONTROL CIRCUIT					NONE		
	DIAGRAM	극동호이스트 주식회사 KUK DONG HOIST CO., LTD.				DWG. NO	KDC2E004	

192.168.11.155 / 2011-06-17 15:51:30

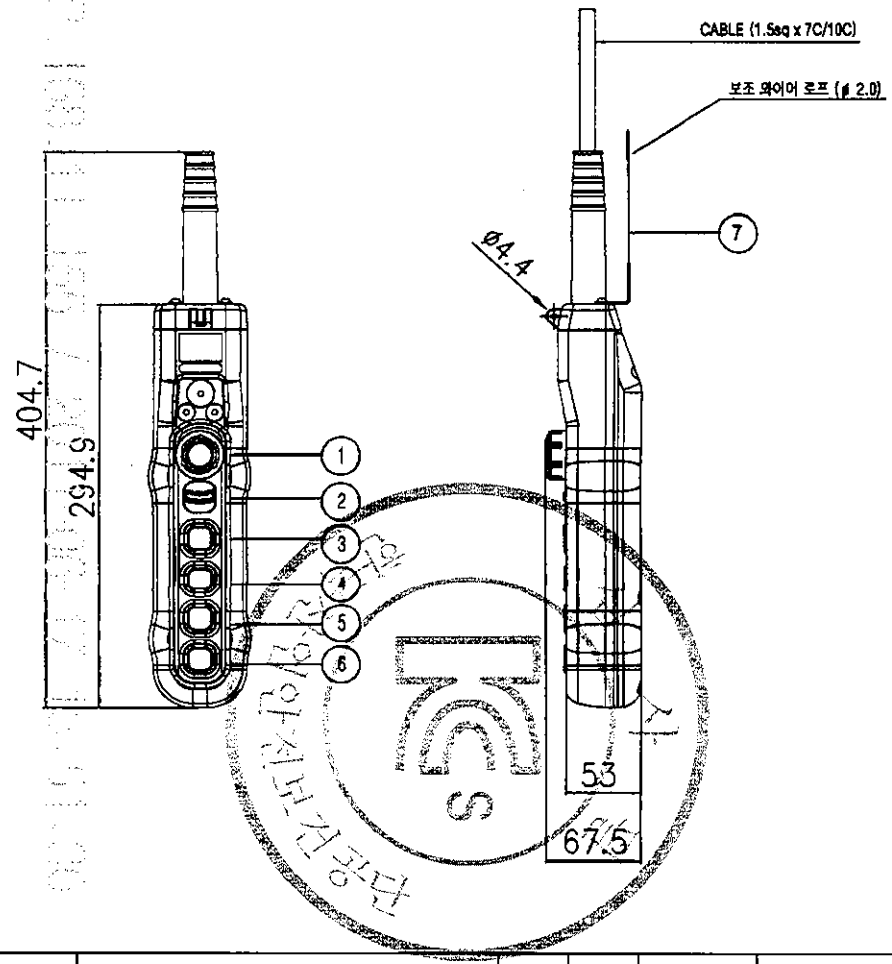

구분 / 색상	조작버튼	표시등
적색	비상	비상
황색	비정상	비정상
녹색	정상	정상
청색	의무	의무
흰색,회색-흑색	지정된의미없음	기타

* MATERIAL : POLYCARBOBATE(PLASTIC)
* BODY COLOR : YELLOW, BLACK
* IP : 55 이상

NO	SYMBOL	TYPE	SPEC.	COLOR
1	E.B.S	PUSH LOCK TURN RESET TYPE	250VAC x 6A	RED
2	SPARE			BLACK
3	상	1PUSH BUTTON 1STEP		
4	하	1PUSH BUTTON 1STEP		
5	동(전)	1PUSH BUTTON 1(2)STEP		
6	서(후)	1PUSH BUTTON 1(2)STEP		
7	보조 와이어	ø 2.0		

MK	DATE	REVISIONS	CHK.	APP.	CUSTOMER		DRAWING	DESIGN	CHECKED	APPROVED	SCALE	DATE
					DRAWING TITLE	PENDANT PUSH BUTTON SWITCH						
						LAY OUT	KD KUK DONG HOIST CO., LTD.			DWG. NO		

192.168.11.155 / 2011-06-17 15:51:30

불법복제 및 배포금지

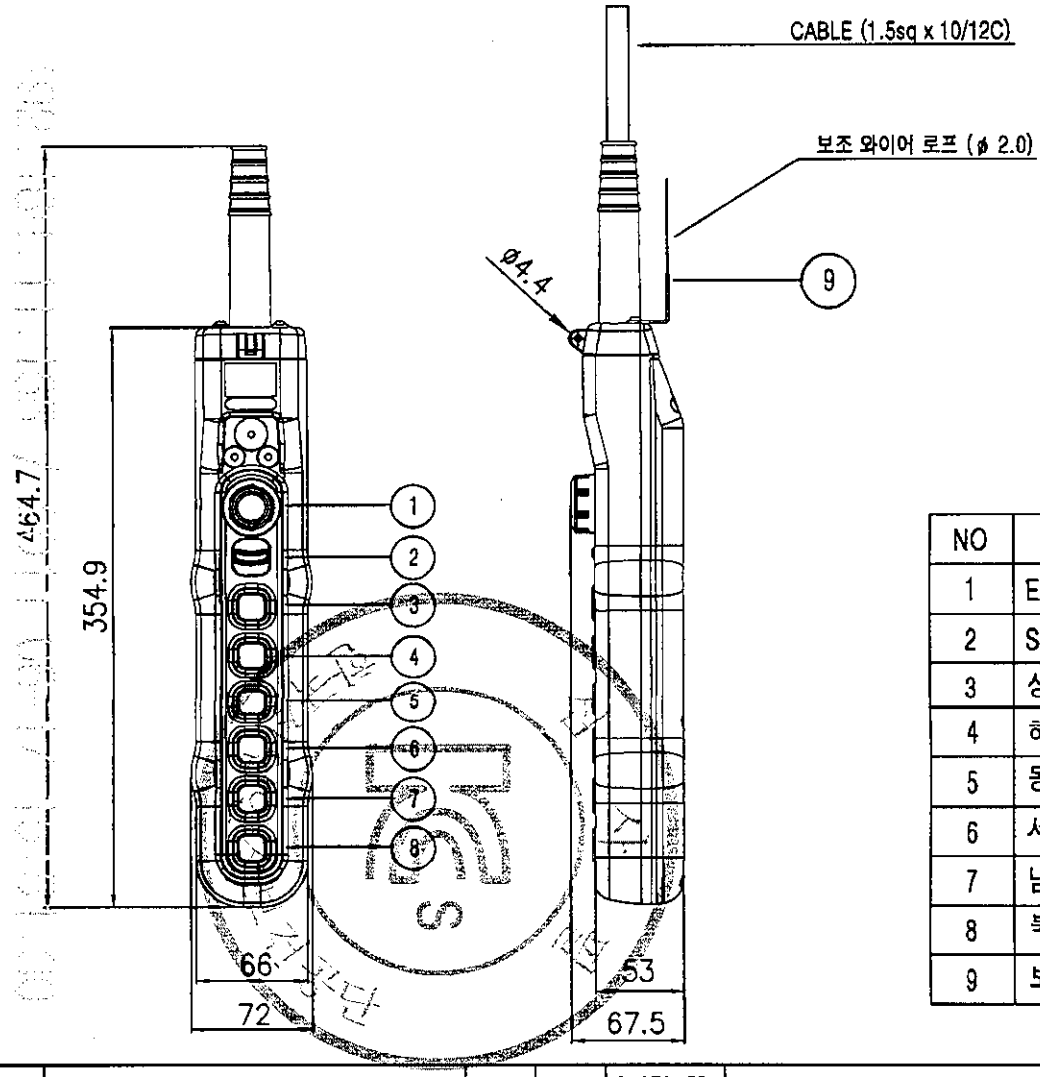

색상 \ 구분	조작버튼	표시등
적색	비상	비상
황색	비정상	비정상
녹색	정상	정상
청색	의무	의무
흰색,회색-흑색	지정된의미없음	기타

* MATERIAL : POLYCARBOBATE(PLASTIC)
* BODY COLOR : YELLOW, BLACK
* IP : 55 이상

NO	SYMBOL	TYPE	SPEC.	COLOR
1	E.B.S	PUSH LOCK TURN RESET TYPE	250VAC x 6A	RED
2	SPARE			BLACK
3	상	1PUSH BUTTON 1STEP		
4	하	1PUSH BUTTON 1STEP		
5	동 (좌)	1PUSH BUTTON 1(2)STEP		
6	서 (우)	1PUSH BUTTON 1(2)STEP		
7	남 (전)	1PUSH BUTTON 1STEP		
8	북 (후)	1PUSH BUTTON 1STEP		
9	보조 WIRE	ø 2.0		

MK	DATE	REVISIONS	CHK.	APP.	CUSTOMER		DRAWING	DESIGN	CHECKED	APPROVED	SCALE	DATE
					DRAWING TITLE	PENDANT PUSH BUTTON SWITCH						
						LAY OUT	KD KUK DONG HOIST CO., LTD.			DWG. NO		

192.168.11.155 / 2011-06-17 15:51:30

불법복제 및 배포금지

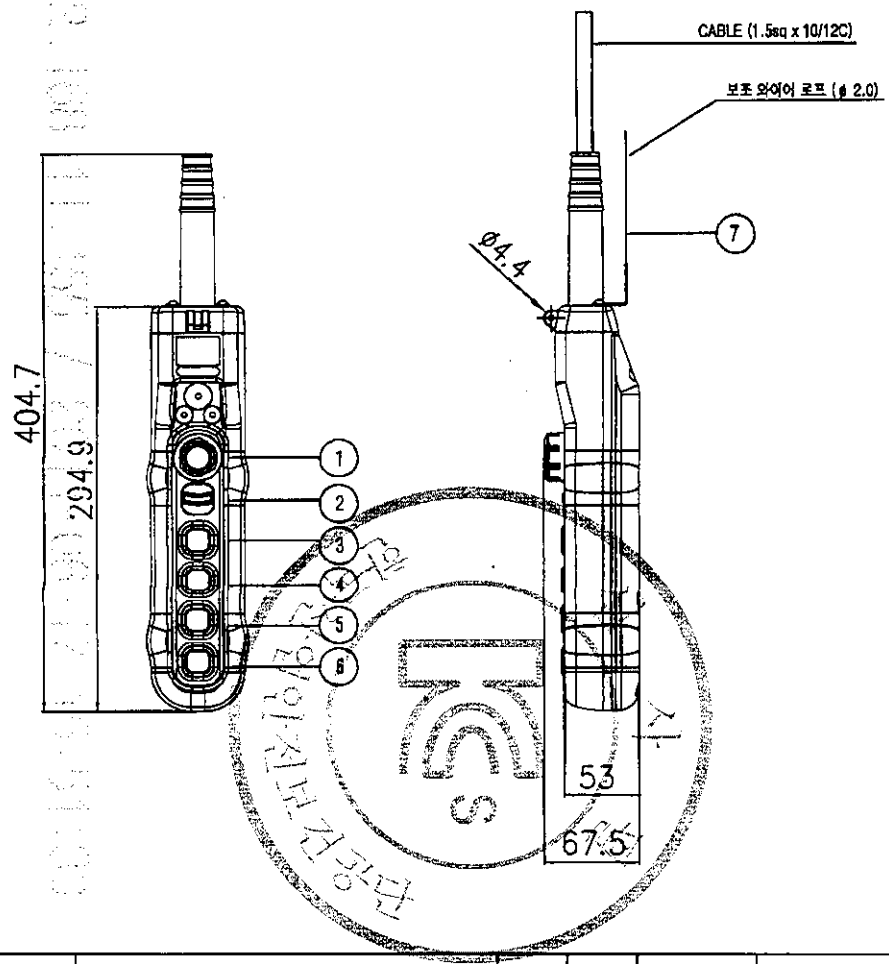

구분 / 색상	조작버튼	표시등
적색	비상	비상
황색	비정상	비정상
녹색	정상	정상
청색	의무	의무
흰색,회색-흑색	지정된의미없음	기타

* MATERIAL : POLYCARBOBATE(PLASTIC)
* BODY COLOR : YELLOW, BLACK
* IP : 55 이상

NO	SYMBOL	TYPE	SPEC.	COLOR
1	E.B.S	PUSH LOCK TURN RESET TYPE	250VAC x 6A	RED
2	SPARE			BLACK
3	상	1PUSH BUTTON 1STEP		
4	하	1PUSH BUTTON 1STEP		
5	동(전)	1PUSH BUTTON 2STEP		
6	서(후)	1PUSH BUTTON 2STEP		
7	보조 와이어	ø 2.0		

MK	DATE	REVISIONS	CHK.	APP.	CUSTOMER		DRAWING	DESIGN	CHECKED	APPROVED	SCALE	DATE
					DRAWING TITLE	PENDANT PUSH BUTTON SWITCH						
						LAY OUT	KD KUK DONG HOIST CO., LTD.			DWG. NO		

192.168.11.155 / 2011-06-17 15:51:30

불법복제 및 배포금지

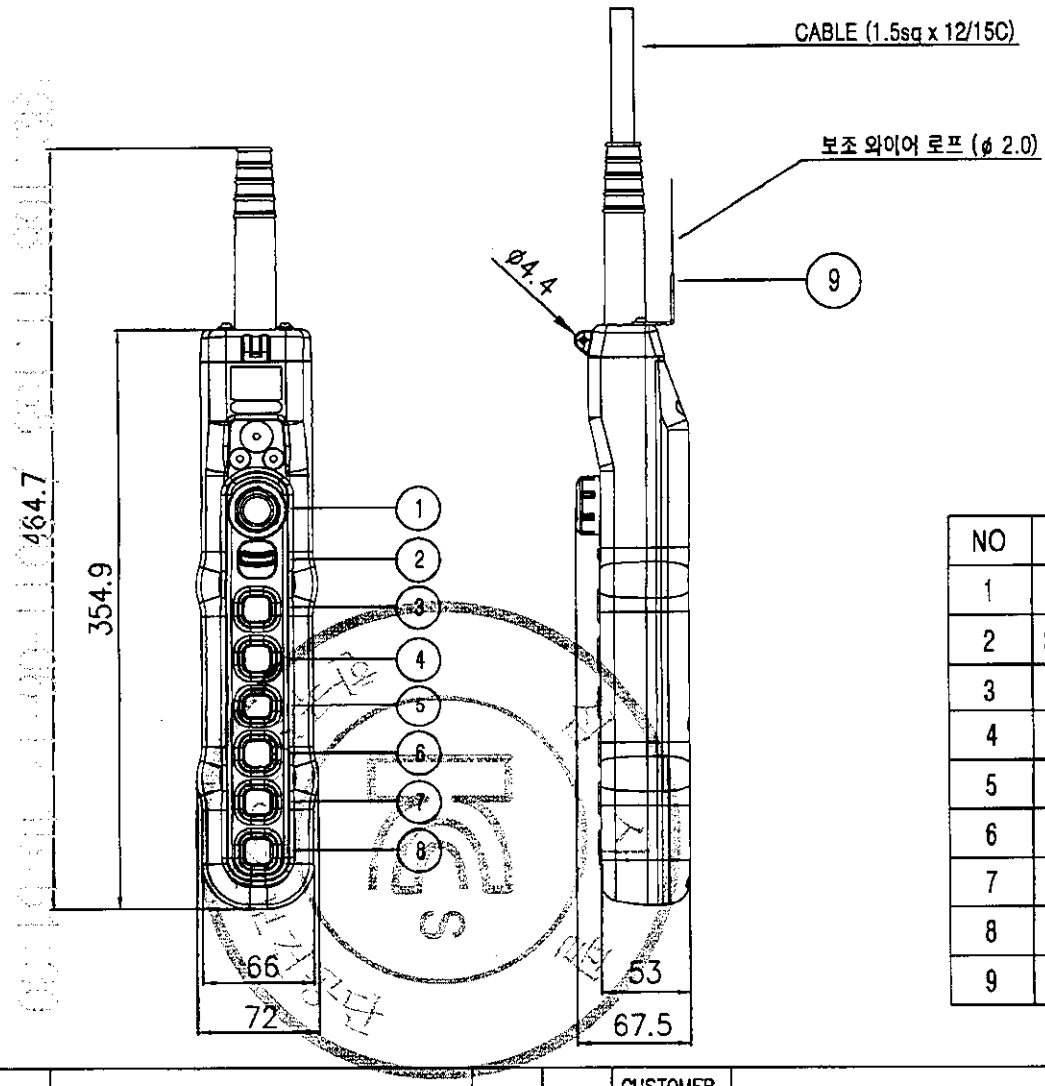

구분 / 색상	조작버튼	표시등
적색	비상	비상
황색	비정상	비정상
녹색	정상	정상
청색	의무	의무
흰색,회색-흑색	지정된의미없음	기타

* MATERIAL : POLYCARBOBATE(PLASTIC)
* BODY COLOR : YELLOW, BLACK
* IP : 55 이상

NO	SYMBOL	TYPE	SPEC.	COLOR
1	E.B.S	PUSH LOCK TURN RESET TYPE	250VAC x 6A	RED
2	SPARE			BLACK
3	상	1PUSH BUTTON 1STEP		
4	하	1PUSH BUTTON 1STEP		
5	동 (좌)	1PUSH BUTTON 2STEP		
6	서 (우)	1PUSH BUTTON 2STEP		
7	남 (전)	1PUSH BUTTON 1STEP		
8	북 (후)	1PUSH BUTTON 1STEP		
9	보조 WIRE	ø 2.0		

MK	DATE	REVISIONS	CHK.	APP.
3				
2				
1				

CUSTOMER		DRAWING	DESIGN	CHECKED	APPROVED	SCALE	DATE
DRAWING TITLE	PENDANT PUSH BUTTON SWITCH LAY OUT	KD KUK DONG HOIST CO., LTD.			DWG. NO		

192.168.11.155 / 2011-06-17 15:51:30

불법복제 및 배포금지

Ⅰ-4. Ⅰ-BEAM의 고정방법 및 사양

1. Ⅰ-BEAM의 고정방법

용 접 구 조	BOLT 체 결 구 조	복 합 구 조
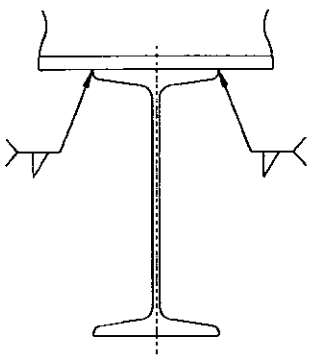	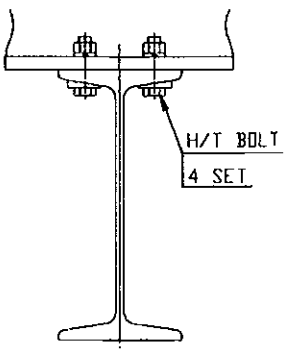	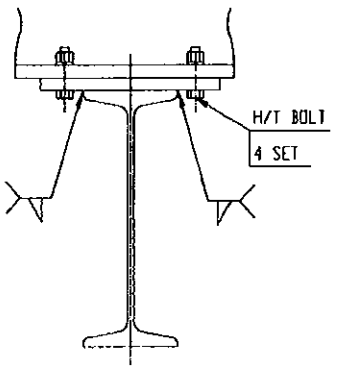

2. 기본조건 및 사양

* 동하중에 의한 용접이음의 허용응력 (필렛용접 효율 80% 포함) : 560 kg/㎠
* H/T BOLT의 허용 인장응력 : 2500kg/㎠

정격하중 (TON)	용 접 구 조 (mm)		BOLT 체결구조
	용접두께	최소 용접길이	최소 BOLT SIZE
1.0	6	100 × 2개소	M12 × 4 SET
2.0	6	125 × 2개소	M12 × 4 SET
2.8	6	125 × 2개소	M12 × 4 SET
3.0	6	125 × 2개소	M12 × 4 SET
5.0	8	150 × 2개소	M16 × 4 SET

한국산업안전보건공단

192.168.11.155 / 2011-06-17 15:51:30

192.168.11.155 / 2011-06-17 15:51:30

3. I -BEAM의 연결방법

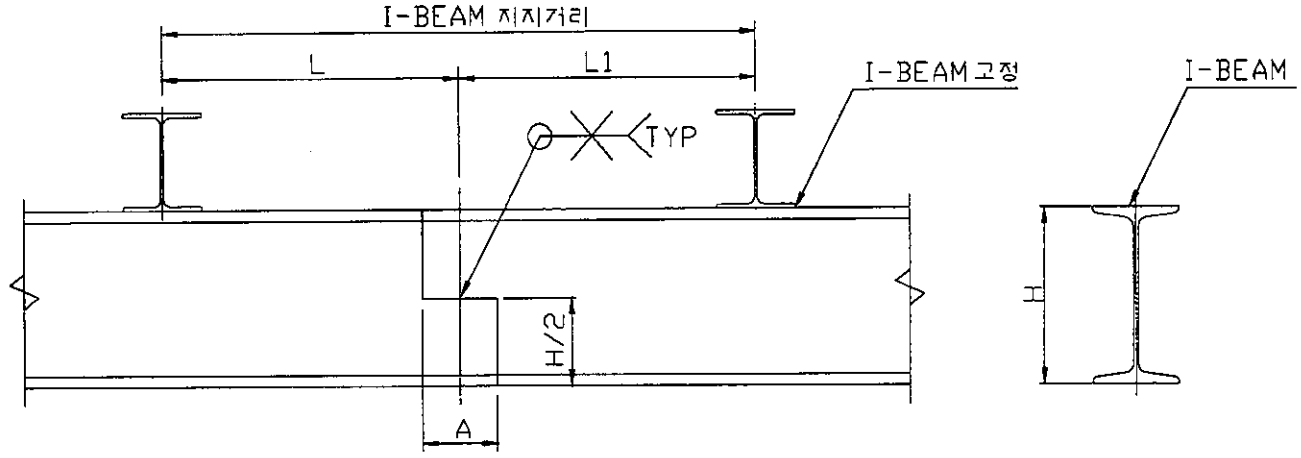

구조 (단위 : mm)

* I-BEAM의 용접 연결부위는 I-BEAM 고정 지점과 동일 선상에 위치하지 않도록 한다.
* 고정 지점 사이 중앙에 용접 연결부위가 일치하지 않도록 한다.

사용 I-BEAM	A	H	H/2	최대 지지거리				
				1 T	2 T	2.8 T	3 T	5 T
200×100×t7/10	200	200	100	4000				
250×125×t7.5/12.5	200	250	125	6000	4500	3600	3600	
300×150×t10/18.5	300	300	150	9000	7100	5800	5800	4500
350×150×t9/15	300	350	175	9800	7800	6300	6000	5900
400×150×t10/18	300	400	200	12600	9800	8000	7700	5700
450×175×t11/20	300	450	225		12500	10000	9900	7700

단, 사용 I-BEAM은 MODEL별 기술사양서의 BEAM 폭을 참조 할 것

불법복제 및 배포금지
192.168.11.155 / 2011-06-17 15:51:30

불법복제 및 배포금지

* I-BEAM 고정 방법 중 용접 구조의 용접 강도

$$\text{용접부 강도 } \sigma = 1.14 \times \frac{\text{I-BEAM자중} + 1.25 \times (\text{정격하중} + \text{Hoist자중})}{0.707 \times \text{용접두께} \times \text{용접길이}} \leq 560\ \text{kg/㎠}$$

I-BEAM 규격	BEAM 자중 (kg/m)	용접 두께 (cm)	최소 용접길이 (cm)	1 T		2 T		2.8 T		3 T		5 T	
				HOIST 자중(KG)	용접강도 (kcal/㎠)	HOIST 자중(KG)	용접강도 (kcal/㎠)	HOIST 자중(KG)	용접강도 (kcal/㎠)	HOIST 자중(KG)	용접강도 (kcal/㎠)	HOIST 자중(KG)	용접강도 (kcal/㎠)
200×100×t7/10	26.0	0.6	10×2	320	225.2								
250×125×t7.5/12.5	38.3	0.6	12.5×2	320	181.5	440	332.0	690	473.1	620	490.5		
300×150×t10/18.5	65.6	0.6	15.0×2	320	153.7	440	279.1	690	396.7	620	411.2	642	478.2
350×150×t9/15	58.5	0.6	15.0×2	320	153.0	440	278.5	690	396.0	620	410.6	642	477.8
400×150×t10/18	72.0	0.8	15.0×2	320	115.7	440	279.7	690	397.2	620	411.8	642	478.7
450×175×t11/20	91.7	0.8	17.5×2			440	281.4	690	399.0	620	354.5	642	480.0

단, 사용 I-BEAM은 MODEL 별 기술사양서의 BEAM 폭을 참조 할 것

192.168.11.155 / 2011-06-17 15:51:30

192.168.11.155 / 2011-06-17 15:51:30

불법복제 및 배포금지

* I-BEAM 고정 방법 중 BOLT 고정 강도

$$\text{BOLT 강도}\quad \sigma = 1.14\ \frac{\text{I-BEAM자중}+1.25\times(\text{정격하중}+\text{Hoist자중})}{\text{BOLT 단면적}\times\text{BOLT 수}} \leq 2500\ \text{kg/cm}^2$$

I-BEAM 규격	BEAM 자중 (kg/m)	BOLT 규 격	BOLT 수	BOLT 단면적 (cm^2)	1 T		2 T		2.8 T		3 T		5 T	
					HOIST 자중(KG)	BOLT강도 (kcal/cm²)	HOIST 자중(KG)	BOLT강도 (kcal/cm²)	HOIST 자중(KG)	BOLT강도 (kcal/cm²)	HOIST 자중(KG)	BOLT강도 (kcal/cm²)	HOIST 자중(KG)	BOLT강도 (kcal/cm²)
200×100×t7/10	26.0	M12	4	1.13	320	422.7								
250×125×t7.5/12.5	38.3	M12	4	1.13	320	425.8	440	778.9	690	1109.9	620	1150.9		
300×150×t10/18.5	65.6	M12	4	1.13	320	432.7	440	785.8	690	1116.8	620	1157.8	642	1009.3
350×150×t9/15	58.5	M12	4	1.13	320	430.9	440	784.0	690	1115.0	620	1156.0	642	1008.3
400×150×t10/18	72.0	M16	4	2.01	320	244.2	440	442.7	690	628.8	620	651.8	642	1010.2
450×175×t11/20	91.7	M16	4	2.01			440	445.5	690	631.6	620	654.6	642	1013.0

불법복제 및 배포금지

Ⅰ-5. Ⅰ-BEAM의 최대 지지거리

5-1. 굽힘 MOMENT 계산

1. 수직하중에 의한 굽힘 MOMENT

BEAM 자중에 의한 MOMENT : $Ms = \dfrac{M \times \text{I-BEAM 자중} \times (\text{지지거리})^2}{8}$ kg-cm

$Ms = \dfrac{1.05 * 38.3 * 450^2}{8} = 10179$ kg-cm

이동하중에 의한 MOMENT : $M_d = F \times \dfrac{(\text{정격하중}+\text{호이스트 자중}) \times \text{지지거리}}{4}$ kg-cm

$M_d = 1.254 \times \dfrac{(2000 + 440) * 450}{4} = 344223$ kg-cm

* 호이스트 자중 = 440 KG 용 량 : 2000 KG

* DYNAMIC COEFFICIENT : F = 1.254
* STATIC COEFFICIENT : M = 1.05

굽힘 MOMENT 합계 : $\Sigma M_v = M_s + M_d = 10179 + 344223 = 354402$ kg-cm

2. 풍하중에 의한 굽힘 MOMENT

풍하중에 의한 MOMENT : $M_w = \dfrac{\text{풍하중}(W) \times \text{지지거리}}{2}$

$M_w = \dfrac{40.03 * 450}{2} = 9007.4$ kg-cm

풍하중 : W = 속도압(q) × 속도계수(C) × 압력을 받는 면적(A) (kg)

= 23.66 x 1.2 x 1.41 = 40.03 (kg)

속도압 : $q = 8.5 \times \sqrt[4]{h}(kg/m^2) = 8.5 \times \sqrt[4]{60} = 23.66$ (kg/m^2)

속도계수 : C = 1.2 (크레인 제작기준 참조)

풍압을 받는 면적 A = I-BEAM의 면적 + HOIST의 면적 (m^2)

= 1.1 + 0.31 = 1.41 (m^2)

* 호이스트의 풍압을 받는 면적 ≒ 0.8㎡

I-BEAM 규격	BEAM 자중 (kg/m)	최 대 지지거리 (cm)	Ms (kg-cm)	M_d (kg-cm)	ΣMv (kg-cm)	W (kg)	Mw (kg-cm)	A (m^2)
250×125×t7.5/12.5	38.3	450	10179	344223	354402	40.03	9007.4	1.41
300×150×t10/18.5	65.6	710	43403	543107	586510	58.20	20662.3	2.05
350×150×t9/15	58.5	760	46714	596653	643367	60.42	26685.6	2.41
400×150×t10/18	72.0	980	90758	749641	840399	88.30	43266.6	3.11
450×175×t11/20	91.7	1250	188057	956175	1144232	125.21	61352.3	4.41

단, 사용 I-BEAM은 MODEL별 기술사양서의 BEAM 폭을 참조 할 것

192.168.11.155 / 2011-06-17 15:51:30

불법복제 및 배포금지

5-2. 굽힘 응력 계산

1. 수직하중에 의한 굽힘 응력

$$* \ \sigma_v = \frac{\text{수직 굽힘 MOMENT 합계} : \Sigma M_v}{\text{단면 계수} : Z_x} \quad (kg/cm^2)$$

$$= \frac{354402}{415} = 854.0 \quad (kg/cm^2)$$

2. 풍하중에 의한 굽힘 응력

$$* \ \sigma_w = \frac{\text{풍하중에 의한 굽힘 MOMENT} : M_w}{\text{단면 계수} : Z_y} \quad (kg/cm^2)$$

$$= \frac{9007.4}{56.2} = 160.3 \quad (kg/cm^2)$$

2. 풍하중에 의한 굽힘 응력

$$* \ \Sigma\sigma = \sigma v + \sigma w \leqq 0.8 \times 1449 = 1159 \ kg/cm^2$$

I-BEAM 규격	단 면 계 수 Zx	단 면 계 수 Zy	ΣMv (kg-cm)	Mw (kg-cm)	σv (kg/cm²)	σw (kg/cm²)	Σσ (kg/cm²)
250×125×t7.5/12.5	415	56.2	354402	9007.4	854.0	160.3	1014.3
300×150×t10/18.5	849	118	586510	20662.3	690.8	175.1	865.9
350×150×t9/15	871	95.4	643367	26685.6	738.7	279.7	1018.4
400×150×t10/18	1220	118	840399	43266.6	688.9	366.7	1055.5
450×175×t11/20	1740	177	1144232	61352.3	657.6	346.6	1004.2

단, I-BEAM의 사용은 MODEL 별 기술사양서에 따른다.

192.168.11.155 / 2011-06-17 15:51:30

불법복제 및 배포금지

5-3. I-BEAM 처짐(DEFLECTION)

1. I-BEAM 자중에 의한 처짐

$$* \ \delta_s = \frac{5 \times \text{I-BEAM자중} \times \text{지지거리}^3}{384 \times 2100000 \times I_x} \quad (cm)$$

$$= \frac{5 * 38.3 * 450^3}{384 * 2100000 * 5180} = 0.0418 \quad (cm)$$

2. 이동하중에 의한 처짐 (DEFLECTION)

$$* \ \delta_d = \frac{(\text{정격하중} + \text{호이스트자중}) \times \text{지지거리}^3}{48 \times 2100000 \times I_x} \quad (cm)$$

$$= \frac{(2000 + 440) \times 450^3}{48 * 2100000 * 5180} = 0.426 \quad (cm)$$

3. 판 정

1) 이동하중에 의한 처짐판정(하단표기)

$$\frac{\text{이동하중에 의한 처짐} : \delta_d}{\text{지지거리}} < \frac{1}{1000}$$

$$= \frac{0.426}{450} = \frac{1}{1057} < \frac{1}{1000}$$

2) 처짐량 합계에 의한 처짐판정 (하단표기)

$$\frac{\text{I-BEAM 자중에 의한 처짐} : \delta_s + \text{이동하중에 의한 처짐} : \delta_d}{\text{지지거리}} < \frac{1}{800}$$

$$= \frac{0.0418+0.426}{450} = \frac{1}{962} < \frac{1}{800}$$

I-BEAM 규격	단면2차 MOMENT Ix	BEAM 자중 (kg/m)	δ_s (cm)	δ_d (cm)	이동하중에 의한 처짐 판정	처짐량 합계에의한 처짐판정
250×125×t7.5/12.5	5180	38.3	0.0418	0.426	1 / 1057	1 / 962
300×150×t10/18.5	12700	65.6	0.1146	0.682	1 / 1041	1 / 891
350×150×t9/15	15200	58.5	0.1132	0.756	1 / 1032	1 / 898
400×150×t10/18	24100	72	0.1743	0.945	1 / 1037	1 / 875
450×175×t11/20	39200	91.7	0.2833	1.206	1 / 1036	1 / 839

단, I-BEAM의 사용은 MODEL 별 기술사양서에 따른다.

192.168.11.155 / 2011-06-17 15:51:30

불법복제 및 배포금지

Ⅰ-6. Ⅰ-BEAM의 최대 지지거리

6-1. 굽힘 MOMENT 계산

1. 수직하중에 의한 굽힘 MOMENT

BEAM 자중에 의한 MOMENT : $Ms = \dfrac{M \times \text{I-BEAM 자중} \times (\text{지지거리})^2}{8}$ kg-cm

$Ms = \dfrac{1.05 * 65.6 * 710^2}{8} = 43403$ kg-cm

이동하중에 의한 MOMENT : $M_d = F \times \dfrac{(\text{정격하중+호이스트 자중}) \times \text{지지거리}}{4}$ kg-cm

$M_d = 1.254 \times \dfrac{(2000 + 440) * 710}{4} = 543107$ kg-cm

* 호이스트 자중 = 440 KG 용 량 : 2000 KG

* DYNAMIC COEFFICIENT : F = 1.254
* STATIC COEFFICIENT : M = 1.05

굽힘 MOMENT 합계 : $\sum M_v = M_s + M_d = 43403 + 543107 = 586510$ kg-cm

2. 풍하중에 의한 굽힘 MOMENT

풍하중에 의한 MOMENT : $M_w = \dfrac{\text{풍하중(W)} \times \text{지지거리}}{2}$

$M_w = \dfrac{58.2 * 710}{2} = 20662.3$ kg-cm

풍하중 : W = 속도압(q) × 속도계수(C) × 압력을 받는 면적(A) (kg)

= 23.66 x 1.2 x 2.05 = 58.20 (kg)

속도압 : $q = 8.5 \times \sqrt[4]{h}$(kg/㎡) $= 8.5 \times \sqrt[4]{60} =$ 23.66 (kg/㎡)

속도계수 : C = 1.2 (크레인 제작기준 참조)

풍압을 받는 면적 A = I-BEAM의 면적 + HOIST의 면적 (㎡)

= 1.74 + 0.31 = 2.05 (m^2)

* 호이스트의 풍압을 받는 면적 ≒ 0.8㎡

I-BEAM 규격	BEAM 자중 (kg/m)	최 대 지지거리 (cm)	Ms (kg-cm)	M_d (kg-cm)	ΣMv (kg-cm)	W (kg)	Mw (kg-cm)	A (m^2)
250×125×t7.5/12.5	38.3	450	10179	344223	354402	40.03	9007.4	1.41
⇨ 300×150×t10/18.5	65.6	710	43403	543107	586510	58.20	20662.3	2.05
350×150×t9/15	58.5	780	46714	596653	643367	69.42	26685.6	2.41
400×150×t10/18	72.0	980	90758	749641	840399	88.30	43267.0	3.11
450×175×t11/20	91.7	1250	188057	956175	1144232	125.21	61352.3	4.41

단, 사용 I-BEAM은 MODEL별 기술사양서의 BEAM 특을 참조 할 것

192.168.11.155 / 2011-06-17 15:51:30

불법복제 및 배포금지

6-2. 굽힘 응력 계산

1. 수직하중에 의한 굽힘 응력

$$* \ \sigma_v = \frac{\text{수직 굽힘 MOMENT 합계} : \sum M_v}{\text{단면 계수} : Z_x} \ (kg/cm^2)$$

$$= \frac{586510}{849} = 690.8 \ (kg/cm^2)$$

2. 풍하중에 의한 굽힘 응력

$$* \ \sigma_w = \frac{\text{풍하중에 의한 굽힘 MOMENT} : M_w}{\text{단면 계수} : Z_y} \ (kg/cm^2)$$

$$= \frac{20662.3}{118} = 175.1 \ (kg/cm^2)$$

2. 풍하중에 의한 굽힘 응력

$$* \ \sum\sigma = \sigma v + \sigma w \leq 0.8 \times 1449 = 1159 \ kg/cm^2$$

I-BEAM 규격	단면 계수 Zx	단면 계수 Zy	ΣMv (kg-cm)	Mw (kg-cm)	σv (kg/cm²)	σw (kg/cm²)	Σσ (kg/cm²)
250×125×t7.5/12.5	415	56.2	354402	9007.4	854.0	160.3	1014.3
⇨ 300×150×t10/18.5	849	118	586510	20662.3	690.8	175.1	865.9
350×150×t9/15	871	95.4	643367	26685.6	738.7	279.7	1018.4
400×150×t10/18	1220	118	840399	43267.0	688.9	366.7	1055.6
450×175×t11/20	1740	177	1144232	61352.3	657.8	346.6	1004.2

단, I-BEAM의 사용은 MODEL 별 기술사양서에 따른다.

192.168.11.155 / 2011-06-17 15:51:30

불법복제 및 배포금지

6-3. I-BEAM 처짐(DEFLECTION)

1. I-BEAM 자중에 의한 처짐

$$* \ \delta_s = \frac{5 \times \text{I-BEAM자중} \times \text{지지거리}^3}{384 \times 2100000 \times I_x} \quad (cm)$$

$$= \frac{5 * 65.6 * 710^3}{384 * 2100000 * 12700} = 0.1146 \quad (cm)$$

2. 이동하중에 의한 처짐 (DEFLECTION)

$$* \ \delta_d = \frac{(\text{정격하중} + \text{호이스트자중}) \times \text{지지거리}^3}{48 \times 2100000 \times I_x} \quad (cm)$$

$$= \frac{(2000 + 440) \times 710^3}{48 * 2100000 * 12700} = 0.682 \quad (cm)$$

3. 판 정

1) 이동하중에 의한 처짐판정(하단표기)

$$\frac{\text{이동하중에 의한 처짐} : \delta_d}{\text{지지거리}} < \frac{1}{1000}$$

$$= \frac{0.682}{710} = \frac{1}{1041} < \frac{1}{1000}$$

2) 처짐량 합계에 의한 처짐판정 (하단표기)

$$\frac{\text{I-BEAM 자중에 의한 처짐} : \delta_s + \text{이동하중에 의한 처짐} : \delta_d}{\text{지지거리}} < \frac{1}{800}$$

$$= \frac{0.1146+0.682}{710} = \frac{1}{891} < \frac{1}{800}$$

I-BEAM 규격	단면2차 MOMENT Ix	BEAM 자중 (kg/m)	δ_s (cm)	δ_d (cm)	이동하중에 의한 처짐 판정	처짐량 합계에의한 처짐판정
250×125×t7.5/12.5	5180	38.3	0.0418	0.426	1 / 1057	1 / 962
⇨ 300×150×t10/18.5	12700	65.6	0.1146	0.682	1 / 1041	1 / 891
350×150×t9/15	15200	58.5	0.1132	0.756	1 / 1032	1 / 898
400×150×t10/18	24100	72	0.1743	0.945	1 / 1037	1 / 875
450×175×t11/20	39200	91.7	0.2833	1.206	1 / 1036	1 / 839

단, I-BEAM의 사용은 MODEL 별 기술사양서에 따른다.

192.168.11.155 / 2011-06-17 15:51:30

불법복제 및 배포금지

Ⅰ-7. Ⅰ-BEAM의 최대 지지거리

7-1. 굽힘 MOMENT 계산

1. 수직하중에 의한 굽힘 MOMENT

BEAM 자중에 의한 MOMENT : $Ms = \dfrac{M \times \text{I-BEAM 자중} \times (\text{지지거리})^2}{8}$ kg-cm

$Ms = \dfrac{1.05 * 58.5 * 780^2}{8} = 46714$ kg-cm

이동하중에 의한 MOMENT : $M_d = F \times \dfrac{(\text{정격하중+호이스트 자중}) \times \text{지지거리}}{4}$ kg-cm

$M_d = 1.254 \times \dfrac{(2000 + 440) * 780}{4} = 596653$ kg-cm

* 호이스트 자중 = 440 KG 용 량 : 2000 KG

* DYNAMIC COEFFICIENT : F = 1.254

* STATIC COEFFICIENT : M = 1.05

굽힘 MOMENT 합계 : $\Sigma M_v = M_s + M_d = 46714 + 596653 = 643367$ kg-cm

2. 풍하중에 의한 굽힘 MOMENT

풍하중에 의한 MOMENT : $M_w = \dfrac{\text{풍하중(W)} \times \text{지지거리}}{2}$

$M_w = \dfrac{68.42 * 780}{2} = 26685.6$ kg-cm

풍하중 : W = 속도압(q) × 속도계수(C) × 압력을 받는 면적(A) (kg)

= 23.66 x 1.2 x 2.41 = 68.42 (kg)

속도압 : $q = 8.5 \times \sqrt[4]{h}$(kg/㎡) $= 8.5 \times \sqrt[4]{60} =$ 23.66 (kg/㎡)

속도계수 : C = 1.2 (크레인 제작기준 참조)

풍압을 받는 면적 A = I-BEAM의 면적 + HOIST의 면적 (㎡)

= 2.1 + 0.31 = 2.41 (m^2)

* 호이스트의 풍압을 받는 면적 ≒ 0.8㎡

I-BEAM 규격	BEAM 자중 (kg/m)	최 대 지지거리 (cm)	Ms (kg-cm)	M_d (kg-cm)	ΣMv (kg-cm)	W (kg)	Mw (kg-cm)	A (m^2)
250×125×t7.5/12.5	38.3	450	10179	344223	354402	40.03	9007.4	1.41
300×150×t10/18.5	65.6	710	43403	543107	586510	58.20	20662.3	2.05
⇨ 350×150×t9/15	58.5	780	46714	596653	643367	68.42	26685.6	2.41
400×150×t10/18	72.0	980	90758	749641	840399	86.30	43266.6	3.11
450×175×t11/20	91.7	1250	188057	956175	1144232	125.21	61352.3	4.41

단, 사용 I-BEAM은 MODEL별 기술사양서의 BEAM 폭을 참조 할 것

192.168.11.155 / 2011-06-17 15:51:30

불법복제 및 배포금지

7-2. 굽힘 응력 계산

1. 수직하중에 의한 굽힘 응력

$$* \ \sigma_v = \frac{\text{수직 굽힘 MOMENT 합계 : } \Sigma M_v}{\text{단면 계수 : } Z_x} \ (kg/cm^2)$$

$$= \frac{643367}{871} = 738.7 \quad (kg/cm^2)$$

2. 풍하중에 의한 굽힘 응력

$$* \ \sigma_w = \frac{\text{풍하중에 의한 굽힘 MOMENT : } M_w}{\text{단면 계수 : } Z_y} \ (kg/cm^2)$$

$$= \frac{26685.6}{95.4} = 279.7 \quad (kg/cm^2)$$

2. 풍하중에 의한 굽힘 응력

$$* \ \Sigma\sigma = \sigma v + \sigma w \leq 0.8 \times 1449 = 1159 \ kg/cm^2$$

I-BEAM 규격	단면 계수 Zx	단면 계수 Zy	ΣMv (kg-cm)	Mw (kg-cm)	σv (kg/cm²)	σw (kg/cm²)	Σσ (kg/cm²)
250×125×t7.5/12.5	415	56.2	354402	9007.4	854.0	160.3	1014.3
300×150×t10/18.5	849	118	586510	20662.3	690.8	175.1	865.9
⇨ 350×150×t9/15	871	95.4	643367	26685.6	738.7	279.7	1018.4
400×150×t10/18	1220	118	840399	43266.6	688.9	366.7	1055.5
450×175×t11/20	1740	177	1144232	61352.3	657.6	346.6	1004.2

단, I-BEAM의 사용은 MODEL 별 기술사양서에 따른다.

192.168.11.155 / 2011-06-17 15:51:30

불법복제 및 배포금지

7-3. I-BEAM 처짐(DEFLECTION)

1. I-BEAM 자중에 의한 처짐

$$* \ \delta_s = \frac{5 \times \text{I-BEAM자중} \times \text{지지거리}^3}{384 \times 2100000 \times I_x} \quad (cm)$$

$$= \frac{5 * 58.5 * 780^3}{384 * 2100000 * 15200} = 0.1132 \quad (cm)$$

2. 이동하중에 의한 처짐 (DEFLECTION)

$$* \ \delta_d = \frac{(\text{정격하중} + \text{호이스트자중}) \times \text{지지거리}^3}{48 \times 2100000 \times I_x} \quad (cm)$$

$$= \frac{(2000 + 440) \times 780^3}{48 * 2100000 * 15200} = 0.756 \quad (cm)$$

3. 판 정

1) 이동하중에 의한 처짐판정(하단표기)

$$\frac{\text{이동하중에 의한 처짐} : \delta_d}{\text{지지거리}} < \frac{1}{1000}$$

$$= \frac{0.756}{780} = \frac{1}{1032} < \frac{1}{1000}$$

2) 처짐량 합계에 의한 처짐판정 (하단표기)

$$\frac{\text{I-BEAM 자중에 의한 처짐} : \delta_s + \text{이동하중에 의한 처짐} : \delta_d}{\text{지지거리}} < \frac{1}{800}$$

$$= \frac{0.1132+0.756}{780} = \frac{1}{898} < \frac{1}{800}$$

I-BEAM 규격	단면2차 MOMENT Ix	BEAM 자중 (kg/m)	δ_s (cm)	δ_d (cm)	이동하중에 의한 처짐 판정	처짐량 합계에의한 처짐판정
250×125×t7.5/12.5	5180	38.3	0.0418	0.426	1 / 1057	1 / 962
300×150×t10/18.5	12700	65.6	0.1146	0.682	1 / 1041	1 / 891
⇨ 350×150×t9/15	15200	58.5	0.1132	0.756	1 / 1032	1 / 898
400×150×t10/18	24100	72	0.1743	0.945	1 / 1037	1 / 875
450×175×t11/20	39200	91.7	0.2833	1.206	1 / 1036	1 / 839

단, I-BEAM의 사용은 MODEL 별 기술사양서에 따른다.

192.168.11.155 / 2011-06-17 15:51:30

불법복제 및 배포금지

I -8. I -BEAM의 최대 지지거리

8-1. 굽힘 MOMENT 계산

1. 수직하중에 의한 굽힘 MOMENT

BEAM 자중에 의한 MOMENT : $Ms = \dfrac{M \times \text{I-BEAM 자중} \times (\text{지지거리})^2}{8}$ kg-cm

$Ms = \dfrac{1.05 * 72 * 980^2}{8} = 90758$ kg-cm

이동하중에 의한 MOMENT : $M_d = F \times \dfrac{(\text{정격하중+호이스트 자중}) \times \text{지지거리}}{4}$ kg-cm

$M_d = 1.254 \times \dfrac{(2000 + 440) * 980}{4} = 749641$ kg-cm

* 호이스트 자중 = 440 KG 용 량 : 2000 KG

* DYNAMIC COEFFICIENT : F = 1.254
* STATIC COEFFICIENT : M = 1.05

굽힘 MOMENT 합계 : $\Sigma M_v = M_s + M_d = 90758 + 749641 = 840399$ kg-cm

2. 풍하중에 의한 굽힘 MOMENT

풍하중에 의한 MOMENT : $M_w = \dfrac{\text{풍하중(W)} \times \text{지지거리}}{2}$

$M_w = \dfrac{88.3 * 980}{2} = 43266.6$ kg-cm

풍하중 : W = 속도압(q) × 속도계수(C) × 압력을 받는 면적(A) (kg)

= 23.66 x 1.2 x 3.11 = 88.30 (kg)

속도압 : $q = 8.5 \times \sqrt[4]{h}(kg/m^2) = 8.5 \times \sqrt[4]{60} = 23.66$ (kg/m^2)

속도계수 : C = 1.2 (크레인 제작기준 참조)

풍압을 받는 면적 A = I-BEAM의 면적 + HOIST의 면적 (m^2)

= 2.8 + 0.31 = 3.11 (m^2)

* 호이스트의 풍압을 받는 면적 ≒ 0.8㎡

I-BEAM 규격	BEAM 자중 (kg/m)	최 대 지지거리 (cm)	Ms (kg-cm)	M_d (kg-cm)	ΣMv (kg-cm)	W (kg)	Mw (kg-cm)	A (m^2)
250×125×t7.5/12.5	38.3	450	10179	344223	354402	40.03	9007.4	1.41
300×150×t10/18.5	65.6	710	43403	543107	586510	58.20	20662.3	2.05
350×150×t9/15	58.5	780	46714	596653	643367	68.42	26685.6	2.41
⇨ 400×150×t10/18	72.0	980	90758	749641	840399	88.30	43266.6	3.11
450×175×t11/20	91.7	1250	188057	956175	1144232	125.21	61352.3	4.41

단, 사용 I-BEAM은 MODEL별 기술사양서의 BEAM 폭을 참조 할 것

192.168.11.155 / 2011-06-17 15:51:30

불법복제 및 배포금지

8-2. 굽힘 응력 계산

1. 수직하중에 의한 굽힘 응력

$$* \ \sigma_v = \frac{\text{수직 굽힘 MOMENT 합계} : \Sigma M_v}{\text{단면 계수} : Z_x} \ (kg/cm^2)$$

$$= \frac{840399}{1220} = 688.9 \ (kg/cm^2)$$

2. 풍하중에 의한 굽힘 응력

$$* \ \sigma_w = \frac{\text{풍하중에 의한 굽힘 MOMENT} : M_w}{\text{단면 계수} : Z_y} \ (kg/cm^2)$$

$$= \frac{43266.6}{118} = 366.7 \ (kg/cm^2)$$

2. 풍하중에 의한 굽힘 응력

$$* \ \Sigma\sigma = \sigma v + \sigma w \leq 0.8 \times 1449 = 1159 \ kg/cm^2$$

I-BEAM 규격	단 면 계 수 Zx	단 면 계 수 Zy	ΣMv (kg-cm)	Mw (kg-cm)	σv (kg/cm²)	σw (kg/cm²)	Σσ (kg/cm²)
250×125×t7.5/12.5	415	56.2	354402	9007.4	854.0	160.3	1014.3
300×150×t10/18.5	849	118	586510	20662.3	690.8	175.1	865.9
350×150×t9/15	871	95.4	643367	26685.6	738.7	279.7	1018.4
⇨ 400×150×t10/18	1220	118	840399	43266.6	688.9	366.7	1055.5
450×175×t11/20	1740	177	1144232	61352.3	657.6	346.6	1004.2

단, I-BEAM의 사용은 MODEL 별 기술사양서에 따른다.

192.168.11.155 / 2011-06-17 15:51:30

불법복제 및 배포금지

8-3. I-BEAM 처짐(DEFLECTION)

1. I-BEAM 자중에 의한 처짐

$$* \ \delta_s = \frac{5 \times \text{I-BEAM자중} \times \text{지지거리}^3}{384 \times 2100000 \times I_x} \quad (cm)$$

$$= \frac{5 * 72 * 980^3}{384 * 2100000 * 24100} = 0.1743 \quad (cm)$$

2. 이동하중에 의한 처짐 (DEFLECTION)

$$* \ \delta_d = \frac{(\text{정격하중} + \text{호이스트자중}) \times \text{지지거리}^3}{48 \times 2100000 \times I_x} \quad (cm)$$

$$= \frac{(2000 + 440) \times 980^3}{48 * 2100000 * 24100} = 0.945 \quad (cm)$$

3. 판 정

1) 이동하중에 의한 처짐판정(하단표기)

$$\frac{\text{이동하중에 의한 처짐} : \delta_d}{\text{지지거리}} < \frac{1}{1000}$$

$$= \frac{0.945}{980} = \frac{1}{1037} < \frac{1}{1000}$$

2) 처짐량 합계에 의한 처짐판정 (하단표기)

$$\frac{\text{I-BEAM 자중에 의한 처짐} : \delta_s + \text{이동하중에 의한 처짐} : \delta_d}{\text{지지거리}} < \frac{1}{800}$$

$$= \frac{0.1743+0.945}{980} = \frac{1}{875} < \frac{1}{800}$$

I-BEAM 규격	단면2차 MOMENT Ix	BEAM 자중 (kg/m)	δ_s (cm)	δ_d (cm)	이동하중에 의한 처짐 판정	처짐량 합계에의한 처짐판정
250×125×t7.5/12.5	5180	38.3	0.0418	0.426	1 / 1057	1 / 962
300×150×t10/18.5	12700	65.6	0.1146	0.682	1 / 1041	1 / 891
350×150×t9/15	15200	58.5	0.1132	0.756	1 / 1032	1 / 898
⇨ 400×150×t10/18	24100	72	0.1743	0.945	1 / 1037	1 / 875
450×175×t11/20	39200	91.7	0.2633	1.206	1 / 1036	1 / 839

단, I-BEAM의 사용은 MODEL 별 기술사양서에 따른다.

192.168.11.155 / 2011-06-17 15:51:30

불법복제 및 배포금지

Ⅰ-9. Ⅰ-BEAM의 최대 지지거리

9-1. 굽힘 MOMENT 계산

1. 수직하중에 의한 굽힘 MOMENT

BEAM 자중에 의한 MOMENT : $Ms = \dfrac{M \times \text{I-BEAM 자중} \times (\text{지지거리})^2}{8}$ kg-cm

$Ms = \dfrac{1.05 * 91.7 * 1250^2}{8} = 188057$ kg-cm

이동하중에 의한 MOMENT : $M_d = F \times \dfrac{(\text{정격하중}+\text{호이스트 자중}) \times \text{지지거리}}{4}$ kg-cm

$M_d = 1.254 \times \dfrac{(2000 + 440) * 1250}{4} = 956175$ kg-cm

* 호이스트 자중 = 440 KG 용 량 : 2000 KG

* DYNAMIC COEFFICIENT : F = 1.254
* STATIC COEFFICIENT : M = 1.05

굽힘 MOMENT 합계 : $\Sigma M_v = M_s + M_d$ = 188057 + 956175 = 1144232 kg-cm

2. 풍하중에 의한 굽힘 MOMENT

풍하중에 의한 MOMENT : $M_w = \dfrac{\text{풍하중(W)} \times \text{지지거리}}{2}$

$M_w = \dfrac{125.21 * 980}{2} = 61352.3$ kg-cm

풍하중 : W = 속도압(q) × 속도계수(C) × 압력을 받는 면적(A) (kg)

= 23.66 x 1.2 x 4.41 = 125.21 (kg)

속도압 : $q = 8.5 \times \sqrt[4]{h}$(kg/㎡) = $8.5 \times \sqrt[4]{60}$ = 23.66 (kg/㎡)

속도계수 : C = 1.2 (크레인 제작기준 참조)

풍압을 받는 면적 A = I-BEAM의 면적 + HOIST의 면적 (㎡)

= 4.1 + 0.31 = 4.41 (m^2)

* 호이스트의 풍압을 받는 면적 ≒ 0.8㎡

I-BEAM 규격	BEAM 자중 (kg/m)	최 대 지지거리 (cm)	Ms (kg-cm)	M_d (kg-cm)	ΣMv (kg-cm)	W (kg)	Mw (kg-cm)	A (m^2)
250×125×t7.5/12.5	38.3	450	10179	344223	354402	40.03	9007.4	1.41
300×150×t10/18.5	65.6	710	43403	543107	586510	58.20	20662.3	2.05
350×150×t9/15	58.5	780	46714	596653	643367	68.42	26685.6	2.41
400×150×t10/18	72.0	980	90758	749641	840399	88.30	43266.6	3.11
450×175×t11/20	**91.7**	**1250**	**188057**	**956175**	**1144232**	**125.21**	**61352.3**	**4.41**

단, 사용 I-BEAM은 MODEL별 기술사양서의 BEAM 폭을 참조 할 것

192.168.11.155 / 2011-06-17 15:51:30

불법복제 및 배포금지

9-2. 굽힘 응력 계산

1. 수직하중에 의한 굽힘 응력

$$* \ \sigma_v = \frac{\text{수직 굽힘 MOMENT 합계} : \sum M_v}{\text{단면 계수} : Z_x} \ (kg/cm^2)$$

$$= \frac{1144232}{1740} = 657.6 \quad (kg/cm^2)$$

2. 풍하중에 의한 굽힘 응력

$$* \ \sigma_w = \frac{\text{풍하중에 의한 굽힘 MOMENT} : M_w}{\text{단면 계수} : Z_y} \ (kg/cm^2)$$

$$= \frac{61352.3}{177} = 346.6 \quad (kg/cm^2)$$

2. 풍하중에 의한 굽힘 응력

$$* \ \sum\sigma = \sigma v + \sigma w \leq 0.8 \times 1449 = 1159 \ kg/cm^2$$

I-BEAM 규격	단 면 계 수 Zx	단 면 계 수 Zy	∑Mv (kg-cm)	Mw (kg-cm)	σv (kg/cm²)	σw (kg/cm²)	∑σ (kg/cm²)
250×125×t7.5/12.5	415	56.2	354402	9007.4	854.0	160.3	1014.3
300×150×t10/18.5	849	118	586510	20662.3	690.8	175.1	865.9
350×150×t9/15	871	95.4	643367	26685.6	738.7	279.7	1018.4
400×150×t10/18	1220	118	840399	43266.6	688.9	366.7	1055.5
⇨ 450×175×t11/20	1740	177	1144232	61352.3	657.6	346.6	1004.2

단, I-BEAM의 사용은 MODEL 별 기술사양서에 따른다.

192.168.11.155 / 2011-06-17 15:51:30

불법복제 및 배포금지

9-3. I-BEAM 처짐(DEFLECTION)

1. I-BEAM 자중에 의한 처짐

$$* \ \delta_s = \frac{5 \times \text{I-BEAM자중} \times \text{지지거리}^3}{384 \times 2100000 \times I_x} \quad (cm)$$

$$= \frac{5 * 91.7 * 1250^3}{384 * 2100000 * 39200} = 0.2833 \quad (cm)$$

2. 이동하중에 의한 처짐 (DEFLECTION)

$$* \ \delta_d = \frac{(\text{정격하중} + \text{호이스트자중}) \times \text{지지거리}^3}{48 \times 2100000 \times I_x} \ (cm)$$

$$= \frac{(2000 + 440) \times 1250^3}{48 * 2100000 * 39200} = 1.206 \quad (cm)$$

3. 판 정

1) 이동하중에 의한 처짐판정(하단표기)

$$\frac{\text{이동하중에 의한 처짐} : \delta_d}{\text{지지거리}} < \frac{1}{1000}$$

$$= \frac{1.206}{1250} = \frac{1}{1036} < \frac{1}{1000}$$

2) 처짐량 합계에 의한 처짐판정 (하단표기)

$$\frac{\text{I-BEAM 자중에 의한 처짐} : \delta_s + \text{이동하중에 의한 처짐} : \delta_d}{\text{지지거리}} < \frac{1}{800}$$

$$= \frac{0.2833+1.206}{1250} = \frac{1}{839} < \frac{1}{800}$$

I-BEAM 규격	단면2차 MOMENT Ix	BEAM 자중 (kg/m)	δ_s (cm)	δ_d (cm)	이동하중에 의한 처짐 판정	처짐량 합계에의한 처짐판정
250×125×t7.5/12.5	5180	38.3	0.0418	0.426	1 / 1057	1 / 962
300×150×t10/18.5	12700	65.6	0.1146	0.682	1 / 1041	1 / 891
350×150×t9/15	15200	58.5	0.1132	0.756	1 / 1032	1 / 898
400×150×t10/18	24100	72.0	0.1743	0.945	1 / 1037	1 / 875
⇨ 450×175×t11/20	39200	91.7	0.2833	1.206	1 / 1036	1 / 839

단, I-BEAM의 사용은 MODEL 별 기술사양서에 따른다.

192.168.11.155 / 2011-06-17 15:51:30

LOAD LIMITER 권고 SETTING치

* POWER SOURCE : AC 3¢ 220V 60Hz

극동호이스트(주)

HOIST	MOTOR 용량	LOAD LIMITER 권고 SETTING치			LOAD CURRENT		C.T MODEL	연결단자 NO	C.T 용량	REMARK
		LOAD CURRENT	ADJ START TIME	SHOCK TIME	100%	110%				
C1 TON	2.4KW x 4P	110%	1 SEC	1 SEC	10 A	11.2 A	CT-2	K-K1, L-L1	5 V.A	
	0.4KW x 4P	110%	1 SEC	1 SEC	2.7 A	3.1 A	CT-1	K-K1, L-L1	5 V.A	
C2 TON	3.7KW x 4P	110%	1 SEC	1 SEC	16.0 A	17.4 A	CT-2	K-K1, L-L1	5 V.A	
	0.4KW x 4P	110%	1 SEC	1 SEC	2.7 A	3.1 A	CT-1	K-K1, L-L1	5 V.A	
C2.8 TON	5.0KW x 4P	110%	1 SEC	1 SEC	22.8 A	24.2 A	CT-2	K-K1, L-L1	5 V.A	
	1.5KW x 4P	110%	1 SEC	1 SEC	7.3 A	8.3 A	CT-1	K-K1, L-L1	5 V.A	
C3 TON	5.5KW x 4P	110%	1 SEC	1 SEC	22.8 A	24.3 A	CT-2	K-K1, L-L1	5 V.A	
	1.5KW x 4P	110%	1 SEC	1 SEC	7.3 A	8.3 A	CT-1	K-K1, L-L1	5 V.A	
C5 TON	5.5KW x 6P	110%	1 SEC	1 SEC	28.2 A	30.1 A	CT-2	K-K1, L-L1	5 V.A	
	1.0KW x 6P	110%	1 SEC	1 SEC	6.7 A	8.1 A	CT-1	K-K1, L-L1	5 V.A	
C7.5 TON	5.5KW x 6P	110%	1 SEC	1 SEC	28.2 A	30.1 A	CT-2	K-K1, L-L1	5 V.A	
	1.0KW x 6P	110%	1 SEC	1 SEC	6.7 A	8.1 A	CT-1	K-K1, L-L1	5 V.A	
C10 TON	9.0KW x 8P	110%	1 SEC	1 SEC	45.0 A	49.1 A	CT-2	K-K1, L-L1	5 V.A	
	1.1KW x 8P	110%	1 SEC	1 SEC	8.0 A	9.6 A	CT-2	K-K1, L-L1	5 V.A	

NOTE

1. 상기 TABLE의 수치는 권고 SETTING 수치이며 MOTOR의 특성 및 현장 조건에 따라 변경 가능함.

192.168.11.155 / 2011-06-17 15:51:30

불법복제 및 배포금지

192.168.11.155 / 2011-06-17 15:51:30

불법복제 및 배포금지

LOAD LIMITER 권고 SETTING치

* POWER SOURCE : AC 3¢ 380V 60Hz

극동호이스트(주)

HOIST	MOTOR 용량	LOAD LIMITER 권고 SETTING치			LOAD CURRENT		C.T MODEL	연결단자 NO	C.T 용량	REMARK
		LOAD CURRENT	ADJ START TIME	SHOCK TIME	100%	110%				
C1 TON	2.4KW x 4P	110%	1 SEC	1 SEC	5.8 A	6.3 A	CT-2	K-K1, L-L1	5 V.A	
	0.4KW x 4P	110%	1 SEC	1 SEC	1.6 A	2.1 A	CT-1	K-K1, L-L1	5 V.A	
C2 TON	3.7KW x 4P	110%	1 SEC	1 SEC	9.3 A	11.3 A	CT-2	K-K1, L-L1	5 V.A	
	0.4KW x 4P	110%	1 SEC	1 SEC	1.6 A	2.1 A	CT-1	K-K1, L-L1	5 V.A	
C2.8 TON	5.0KW x 4P	110%	1 SEC	1 SEC	12.2 A	13.6 A	CT-2	K-K1, L-L1	5 V.A	
	1.5KW x 4P	110%	1 SEC	1 SEC	4.2 A	5.4 A	CT-1	K-K1, L-L1	5 V.A	
C3 TON	5.5KW x 4P	110%	1 SEC	1 SEC	12.2 A	13.6 A	CT-2	K-K1, L-L1	5 V.A	
	1.5KW x 4P	110%	1 SEC	1 SEC	4.2 A	5.4 A	CT-1	K-K1, L-L1	5 V.A	
C5 TON	5.5KW x 6P	110%	1 SEC	1 SEC	16.3 A	17.8 A	CT-2	K-K1, L-L1	5 V.A	
	1.0KW x 6P	110%	1 SEC	1 SEC	3.9 A	5.3 A	CT-1	K-K1, L-L1	5 V.A	
C7.5 TON	5.5KW x 6P	110%	1 SEC	1 SEC	16.3 A	17.8 A	CT-2	K-K1, L-L1	5 V.A	
	1.0KW x 6P	110%	1 SEC	1 SEC	3.9 A	5.3 A	CT-1	K-K1, L-L1	5 V.A	
C10 TON	9.0KW x 8P	110%	1 SEC	1 SEC	26.0 A	28.6 A	CT-2	K-K1, L-L1	5 V.A	
	1.1KW x 8P	110%	1 SEC	1 SEC	4.6 A	6.1 A	CT-2	K-K1, L-L1	5 V.A	

NOTE

1. 상기 TABLE의 수치는 권고 SETTING 수치이며 MOTOR의 특성 및 현장 조건에 따라 변경 가능함.

192.168.11.155 / 2011-06-17 15:51:30

LOAD LIMITER 권고 SETTING치

* POWER SOURCE : AC 3¢ 440V 60Hz

극동호이스트(주)

HOIST	MOTOR 용량	LOAD LIMITER 권고 SETTING치			LOAD CURRENT		C.T MODEL	연결단자 NO	C.T 용량	REMARK
		LOAD CURRENT	ADJ START TIME	SHOCK TIME	100%	110%				
C1 TON	2.4KW x 4P	110%	1 SEC	1 SEC	5.0 A	7.3 A	CT-2	K-K1, L-L1	5 V.A	
	0.4KW x 4P	110%	1 SEC	1 SEC	1.4 A	1.8 A	CT-1	K-K1, L-L1	5 V.A	
C2 TON	3.7KW x 4P	110%	1 SEC	1 SEC	8.0 A	10.8 A	CT-2	K-K1, L-L1	5 V.A	
	0.4KW x 4P	110%	1 SEC	1 SEC	1.4 A	1.8 A	CT-1	K-K1, L-L1	5 V.A	
C2.8 TON	5.0KW x 4P	110%	1 SEC	1 SEC	10.5 A	13.7 A	CT-2	K-K1, L-L1	5 V.A	
	1.5KW x 4P	110%	1 SEC	1 SEC	3.7 A	4.3 A	CT-1	K-K1, L-L1	5 V.A	
C3 TON	5.5KW x 4P	110%	1 SEC	1 SEC	10.5 A	13.7 A	CT-2	K-K1, L-L1	5 V.A	
	1.5KW x 4P	110%	1 SEC	1 SEC	3.7 A	4.3 A	CT-1	K-K1, L-L1	5 V.A	
C5 TON	5.5KW x 6P	110%	1 SEC	1 SEC	14.1 A	18.5 A	CT-2	K-K1, L-L1	5 V.A	
	1.0KW x 6P	110%	1 SEC	1 SEC	3.3 A	4.7 A	CT-1	K-K1, L-L1	5 V.A	
C7.5 TON	5.5KW x 6P	110%	1 SEC	1 SEC	14.1 A	18.5 A	CT-2	K-K1, L-L1	5 V.A	
	1.0KW x 6P	110%	1 SEC	1 SEC	3.3 A	4.7 A	CT-1	K-K1, L-L1	5 V.A	
C10 TON	9.0KW x 8P	110%	1 SEC	1 SEC	22.5 A	24.8 A	CT-2	K-K1, L-L1	5 V.A	
	1.1KW x 8P	110%	1 SEC	1 SEC	4.0 A	5.4 A	CT-1	K-K1, L-L1	5 V.A	

NOTE

1. 상기 TABLE의 수치는 권고 SETTING 수치이며 MOTOR의 특성 및 현장 조건에 따라 변경 가능함.

불법복제 및 배포금지

LOAD LIMITER 권고 SETTING치

* POWER SOURCE : AC 3Φ 460V 60Hz

극동호이스트(주)

HOIST	MOTOR 용량	LOAD LIMITER 권고 SETTING치			LOAD CURRENT		C.T MODEL	연결단자 NO	C.T 용량	REMARK
		LOAD CURRENT	ADJ START TIME	SHOCK TIME	100%	110%				
C1 TON	2.4KW x 4P	110%	1 SEC	1 SEC	4.8 A	5.2 A	CT-2	K-K1, L-L1	5 V.A	
	0.4KW x 4P	110%	1 SEC	1 SEC	1.3 A	1.5 A	CT-1	K-K1, L-L1	5 V.A	
C2 TON	3.7KW x 4P	110%	1 SEC	1 SEC	7.7 A	8.5 A	CT-2	K-K1, L-L1	5 V.A	
	0.4KW x 4P	110%	1 SEC	1 SEC	1.3 A	1.5 A	CT-1	K-K1, L-L1	5 V.A	
C2.8 TON	5.0KW x 4P	110%	1 SEC	1 SEC	10.0 A	11.5 A	CT-2	K-K1, L-L1	5 V.A	
	1.5KW x 4P	110%	1 SEC	1 SEC	3.5 A	4.3 A	CT-1	K-K1, L-L1	5 V.A	
C3 TON	5.5KW x 4P	110%	1 SEC	1 SEC	10.0 A	11.5 A	CT-2	K-K1, L-L1	5 V.A	
	1.5KW x 4P	110%	1 SEC	1 SEC	3.5 A	4.3 A	CT-1	K-K1, L-L1	5 V.A	
C5 TON	5.5KW x 6P	110%	1 SEC	1 SEC	13.5 A	14.7 A	CT-2	K-K1, L-L1	5 V.A	
	1.0KW x 6P	110%	1 SEC	1 SEC	3.2 A	3.6 A	CT-1	K-K1, L-L1	5 V.A	
C7.5 TON	5.5KW x 6P	110%	1 SEC	1 SEC	13.5 A	14.7 A	CT-2	K-K1, L-L1	5 V.A	
	1.0KW x 6P	110%	1 SEC	1 SEC	3.2 A	3.6 A	CT-1	K-K1, L-L1	5 V.A	
C10 TON	9.0KW x 8P	110%	1 SEC	1 SEC	21.5 A	23.7 A	CT-2	K-K1, L-L1	5 V.A	
	1.1KW x 8P	110%	1 SEC	1 SEC	3.8 A	5.4 A	CT-1	K-K1, L-L1	5 V.A	

NOTE

1. 상기 TABLE의 수치는 권고 SETTING 수치이며 MOTOR의 특성 및 현장 조건에 따라 변경 가능함.

본 문서는 배포금지

192.168.11.155 / 2011-06-17 15:51:30

LOAD LIMITER 권고 SETTING치

* POWER SOURCE : AC 3¢ 480V 60Hz

극동호이스트(주)

HOIST	MOTOR 용량	LOAD LIMITER 권고 SETTING치			LOAD CURRENT		C.T MODEL	연결단자 NO	C.T 용량	REMARK
		LOAD CURRENT	ADJ START TIME	SHOCK TIME	100%	110%				
C1 TON	2.4KW x 4P	110%	1 SEC	1 SEC	4.6 A	5.0 A	CT-2	K-K1, L-L1	5 V.A	
	0.4KW x 4P	110%	1 SEC	1 SEC	1.2 A	1.35 A	CT-1	K-K1, L-L1	5 V.A	
C2 TON	3.7KW x 4P	110%	1 SEC	1 SEC	7.3 A	8.2 A	CT-2	K-K1, L-L1	5 V.A	
	0.4KW x 4P	110%	1 SEC	1 SEC	1.2 A	1.35 A	CT-1	K-K1, L-L1	5 V.A	
C2.8 TON	5.0KW x 4P	110%	1 SEC	1 SEC	9.6 A	11.2 A	CT-2	K-K1, L-L1	5 V.A	
	1.5KW x 4P	110%	1 SEC	1 SEC	3.4 A	4.3 A	CT-1	K-K1, L-L1	5 V.A	
C3 TON	5.5KW x 4P	110%	1 SEC	1 SEC	9.6 A	11.2 A	CT-2	K-K1, L-L1	5 V.A	
	1.5KW x 4P	110%	1 SEC	1 SEC	3.4 A	4.3 A	CT-1	K-K1, L-L1	5 V.A	
C5 TON	5.5KW x 6P	110%	1 SEC	1 SEC	12.9 A	14.2 A	CT-2	K-K1, L-L1	5 V.A	
	1.0KW x 6P	110%	1 SEC	1 SEC	3.1 A	3.5 A	CT-1	K-K1, L-L1	5 V.A	
C7.5 TON	5.5KW x 6P	110%	1 SEC	1 SEC	12.9 A	14.2 A	CT-2	K-K1, L-L1	5 V.A	
	1.0KW x 6P	110%	1 SEC	1 SEC	3.1 A	3.5 A	CT-1	K-K1, L-L1	5 V.A	
C10 TON	9.0KW x 8P	110%	1 SEC	1 SEC	20.6 A	22.7 A	CT-2	K-K1, L-L1	5 V.A	
	1.1KW x 8P	110%	1 SEC	1 SEC	3.6 A	5.4 A	CT-1	K-K1, L-L1	5 V.A	

NOTE

1. 상기 TABLE의 수치는 권고 SETTING 수치이며 MOTOR의 특성 및 현장 조건에 따라 변경 가능함.

본 문서는 배포금지

192.168.11.155 / 2011-06-17 15:51:30

E.O.C.R 권고 SETTING치

* POWER SOURCE : AC 3¢ 220V 60Hz

극동호이스트(주)

HOIST	MOTOR 용량	MOTOR 정격 전류	DRIVE TYPE	E.O.C.R TYPE	권고 SETTING 치			REMARK
					DELAY TIME	OPERATION TIME	CURRENT	
C1 TON	2.4KW x 4P	10.0 A	1 DRAVE	SS-30	3 SEC	1 SEC	10.0 A	
	0.4KW x 4P	2.7 A	1 DRAVE	SS-05	3 SEC	1 SEC	2.7 A	
C2 TON	3.7KW x 4P	16.0 A	1 DRAVE	SS-30	3 SEC	1 SEC	16.0 A	
	0.4KW x 4P	2.7 A	1 DRAVE	SS-05	3 SEC	1 SEC	2.7 A	
C2.8 TON	5.0KW x 4P	22.8 A	1 DRAVE	SS-30	3 SEC	1 SEC	22.8 A	
	1.5KW x 4P	7.3 A	1 DRAVE	SS-30	3 SEC	1 SEC	7.3 A	
C3 TON	5.5KW x 4P	22.8 A	1 DRAVE	SS-30	3 SEC	1 SEC	22.8 A	
	1.5KW x 4P	7.3 A	1 DRAVE	SS-30	3 SEC	1 SEC	7.3 A	
C5 TON	5.5KW x 6P	28.2 A	1 DRAVE	SS-30	3 SEC	1 SEC	28.2 A	
	1.0KW x 6P	6.7 A	1 DRAVE	SS-30	3 SEC	1 SEC	6.7 A	
C7.5 TON	5.5KW x 6P	28.2 A	1 DRAVE	SS-30	3 SEC	1 SEC	28.2 A	
	1.0KW x 6P	6.7 A	1 DRAVE	SS-30	3 SEC	1 SEC	6.7 A	
C10 TON	9.0KW x 8P	45.0 A	1 DRAVE	SS-60	3 SEC	1 SEC	45.0 A	
	1.1KW x 8P	8.0 A	1 DRAVE	SS-30	3 SEC	1 SEC	8.0 A	

NOTE

1. 상기 TABLE의 수치는 권고 SETTING 수치이며 MOTOR의 특성 및 현장 조건에 따라 변경 가능함.

불법복제 및 배포금지

192.168.11.155 / 2011-06-17 15:51:30

E.O.C.R 권고 SETTING치

* POWER SOURCE : AC 3¢ 380V 60Hz

극동호이스트(주)

HOIST	MOTOR 용량	1 정격 전류	DRIVE TYPE	E.O.C.R TYPE	권고 SETTING 치			REMARK
					DELAY TIME	OPERATION TIME	CURRENT	
C1 TON	2.4KW x 4P	5.8 A	1 DRAVE	SS-30	3 SEC	1 SEC	5.8 A	
	0.4KW x 4P	1.6 A	1 DRAVE	SS-05	3 SEC	1 SEC	1.6 A%	
C2 TON	3.7KW x 4P	9.3 A	1 DRAVE	SS-30	3 SEC	1 SEC	9.3 A	
	0.4KW x 4P	1.6 A	1 DRAVE	SS-05	3 SEC	1 SEC	1.6 A	
C2.8 TON	5.0KW x 4P	12.2 A	1 DRAVE	SS-30	3 SEC	1 SEC	12.2 A	
	1.5KW x 4P	4.2 A	1 DRAVE	SS-05	3 SEC	1 SEC	4.2 A	
C3 TON	5.5KW x 4P	12.2 A	1 DRAVE	SS-30	3 SEC	1 SEC	12.2 A	
	1.5KW x 4P	4.2 A	1 DRAVE	SS-05	3 SEC	1 SEC	4.2 A	
C5 TON	5.5KW x 6P	16.3 A	1 DRAVE	SS-30	3 SEC	1 SEC	16.3 A	
	1.0KW x 6P	3.9 A	1 DRAVE	SS-05	3 SEC	1 SEC	3.9 A	
C7.5 TON	5.5KW x 6P	16.3 A	1 DRAVE	SS-30	3 SEC	1 SEC	16.3 A	
	1.0KW x 6P	3.9 A	1 DRAVE	SS-05	3 SEC	1 SEC	3.9 A	
C10 TON	9.0KW x 8P	26.0 A	1 DRAVE	SS-30	3 SEC	1 SEC	26.0 A	
	1.1KW x 8P	4.6 A	1 DRAVE	SS-05	3 SEC	1 SEC	4.6 A	

NOTE

1. 상기 TABLE의 수치는 권고 SETTING 수치이며 MOTOR의 특성 및 현장 조건에 따라 변경 가능함.

불법복제 및 배포금지

192.168.11.155 / 2011-06-17 15:51:30

E.O.C.R 권고 SETTING치

* POWER SOURCE : AC 3¢ 440V 60Hz

극동호이스트(주)

HOIST	MOTOR 용량	MOTOR 정격 전류	DRIVE TYPE	E.O.C.R TYPE	권고 SETTING 치			REMARK
					DELAY TIME	OPERATION TIME	CURRENT	
C1 TON	2.4KW x 4P	5.0 A	1 DRAVE	SS-30	3 SEC	1 SEC	5.0 A	
	0.4KW x 4P	1.4 A	1 DRAVE	SS-05	3 SEC	1 SEC	1.4 A	
C2 TON	3.7KW x 4P	8.0 A	1 DRAVE	SS-30	3 SEC	1 SEC	8.0 A	
	0.4KW x 4P	1.4 A	1 DRAVE	SS-05	3 SEC	1 SEC	1.4 A	
C2.8 TON	5.0KW x 4P	10.5 A	1 DRAVE	SS-30	3 SEC	1 SEC	10.5 A	
	1.5KW x 4P	3.7 A	1 DRAVE	SS-05	3 SEC	1 SEC	3.7 A	
C3 TON	5.5KW x 4P	10.5 A	1 DRAVE	SS-30	3 SEC	1 SEC	10.5 A	
	1.5KW x 4P	3.7 A	1 DRAVE	SS-05	3 SEC	1 SEC	3.7 A	
C5 TON	5.5KW x 6P	14.1 A	1 DRAVE	SS-30	3 SEC	1 SEC	14.1 A	
	1.0KW x 6P	3.3 A	1 DRAVE	SS-05	3 SEC	1 SEC	3.3 A	
C7.5 TON	5.5KW x 6P	14.1 A	1 DRAVE	SS-30	3 SEC	1 SEC	14.1 A	
	1.0KW x 6P	3.3 A	1 DRAVE	SS-05	3 SEC	1 SEC	3.3 A	
C10 TON	9.0KW x 8P	22.5 A	1 DRAVE	SS-30	3 SEC	1 SEC	22.5 A	
	1.1KW x 8P	4.0 A	1 DRAVE	SS-05	3 SEC	1 SEC	4.0 A	

NOTE

1. 상기 TABLE의 수치는 권고 SETTING 수치이며 MOTOR의 특성 및 현장 조건에 따라 변경 가능함.

192.168.11.155 / 2011-06-17 15:51:30

불법복제 및 배포금지

E.O.C.R 권고 SETTING치

* POWER SOURCE : AC 3¢ 460V 60Hz

극동호이스트(주)

HOIST	MOTOR 용량	MOTOR 정격 전류	DRIVE TYPE	E.O.C.R TYPE	권고 SETTING 치			REMARK
					DELAY TIME	OPERATION TIME	CURRENT	
C1 TON	2.4KW x 4P	4.8 A	1 DRAVE	SS-30	3 SEC	1 SEC	4.8 A	
	0.4KW x 4P	1.3 A	1 DRAVE	SS-05	3 SEC	1 SEC	1.4 A	
C2 TON	3.7KW x 4P	7.7 A	1 DRAVE	SS-30	3 SEC	1 SEC	7.7 A	
	0.4KW x 4P	1.3 A	1 DRAVE	SS-05	3 SEC	1 SEC	1.4 A	
C2.8 TON	5.0KW x 4P	10.0 A	1 DRAVE	SS-30	3 SEC	1 SEC	10.0 A	
	1.5KW x 4P	3.5 A	1 DRAVE	SS-05	3 SEC	1 SEC	3.5 A	
C3 TON	5.5KW x 4P	10.0 A	1 DRAVE	SS-30	3 SEC	1 SEC	10.0 A	
	1.5KW x 4P	3.5 A	1 DRAVE	SS-05	3 SEC	1 SEC	3.5 A	
C5 TON	5.5KW x 6P	13.5 A	1 DRAVE	SS-30	3 SEC	1 SEC	13.5 A	
	1.0KW x 6P	3.2 A	1 DRAVE	SS-05	3 SEC	1 SEC	3.2 A	
C7.5 TON	5.5KW x 6P	13.5 A	1 DRAVE	SS-30	3 SEC	1 SEC	13.5 A	
	1.0KW x 6P	3.2 A	1 DRAVE	SS-05	3 SEC	1 SEC	3.2 A	
C10 TON	9.0KW x 8P	21.5 A	1 DRAVE	SS-30	3 SEC	1 SEC	21.5 A	
	1.1KW x 8P	3.8 A	1 DRAVE	SS-05	3 SEC	1 SEC	3.8 A	

NOTE

1. 상기 TABLE의 수치는 권고 SETTING 수치이며 MOTOR의 특성 및 현장 조건에 따라 변경 가능함.

192.168.11.155 / 2011-06-17 15:51:30

불법복제 및 배포금지

192.168.11.155 / 2011-06-17 15:51:30

E.O.C.R 권고 SETTING치

* POWER SOURCE : AC 3¢ 480V 60Hz

극동호이스트(주)

HOIST	MOTOR 용량	MOTOR 정격 전류	DRIVE TYPE	E.O.C.R TYPE	권고 SETTING 치			REMARK
					DELAY TIME	OPERATION TIME	CURRENT	
C1 TON	2.4KW x 4P	4.6 A	1 DRAVE	SS-30	3 SEC	1 SEC	4.6 A	
	0.4KW x 4P	1.2 A	1 DRAVE	SS-05	3 SEC	1 SEC	1.4 A	
C2 TON	3.7KW x 4P	7.3 A	1 DRAVE	SS-30	3 SEC	1 SEC	7.3 A	
	0.4KW x 4P	1.2 A	1 DRAVE	SS-05	3 SEC	1 SEC	1.4 A	
C2.8 TON	5.0KW x 4P	9.6 A	1 DRAVE	SS-30	3 SEC	1 SEC	9.6 A	
	1.5KW x 4P	3.4 A	1 DRAVE	SS-05	3 SEC	1 SEC	3.4 A	
C3 TON	5.5KW x 4P	9.6 A	1 DRAVE	SS-30	3 SEC	1 SEC	9.6 A	
	1.5KW x 4P	3.4 A	1 DRAVE	SS-05	3 SEC	1 SEC	3.4 A	
C5 TON	5.5KW x 6P	12.9 A	1 DRAVE	SS-30	3 SEC	1 SEC	12.9 A	
	1.0KW x 6P	3.1 A	1 DRAVE	SS-05	3 SEC	1 SEC	3.1 A	
C7.5 TON	5.5KW x 6P	12.9 A	1 DRAVE	SS-30	3 SEC	1 SEC	12.9 A	
	1.0KW x 6P	3.1 A	1 DRAVE	SS-05	3 SEC	1 SEC	3.1 A	
C10 TON	9.0KW x 8P	20.6 A	1 DRAVE	SS-30	3 SEC	1 SEC	20.6 A	
	1.1KW x 8P	3.6 A	1 DRAVE	SS-05	3 SEC	1 SEC	3.6 A	

NOTE

1. 상기 TABLE의 수치는 권고 SETTING 수치이며 MOTOR의 특성 및 현장 조건에 따라 변경 가능함.

불법복제 및 배포금지

불법복제 및 배포금지

THREE PHASE INDUCTION MOTOR DATE SHEET

SCHEDULE OF TECHNICAL DATA

1. SERVICE	HOISTING
2. MANUFACTURE	극동호이스트 (주)
3. FRAME NUMBER	112 M
4. RATED POWER	3.7 KW x 4 P
5. RATED VOLTAGE AND FREQUENCY	220 V 60 Hz
6. MOTOR TYPE	SQUIRREL CAGE ROTOR TYPE
7. SERVICE FACTOR AND RATTING	1 . 0 , 30 MIN
8. LOCATION AND INSULATION CLASS	INDOOR, OUTDOOR, B CLASS
9. DESIGN TRMPERATURE RISE(BY RESISTANCE)	80 ℃
10. FULL LOAD SPEED	1760 RPM
11. FULL LOAD CURRENT	16 A
12. LOCKED ROTOR CURRENT	81.5 A
13. MINIMUM STARTING VOLTAGE	200 V
14. EFFICIENCY AT 100% RATED LOAD	83.5 %
15. POWER FACTOR AT 100% RATED LOAD	79.3 %
16. FULL LOAD TORQUE	4.4 KG.M
17. SITE ALTTITUDE(UNDER)	1000 M
18. ENCLOSURE & COOLING METHOD	T E N V
19. TYPE OF BEARING	PL : 6206zz OPL : 6206zz
20. MOUNTING	H O R I Z O N T A L
21. MAXIMUM AMBIENT TEMPURE	40 ℃
22. BEARING LUBRICATION	G R E A S E
23. STARTING METHOD	F U L L V O L T A G E

192.168.11.155 / 2011-06-17 15:51:30

불법복제 및 배포금지

THREE PHASE INDUCTION MOTOR DATE SHEET

SCHEDULE OF TECHNICAL DATA

1. SERVICE	HOISTING
2. MANUFACTURE	극동호이스트 (주)
3. FRAME NUMBER	112 M
4. RATED POWER	3.7 KW x 4 P
5. RATED VOLTAGE AND FREQUENCY	380 V 60 Hz
6. MOTOR TYPE	SQUIRREL CAGE ROTOR TYPE
7. SERVICE FACTOR AND RATTING	1 . 0 , 30 MIN
8. LOCATION AND INSULATION CLASS	INDOOR, OUTDOOR, B CLASS
9. DESIGN TRMPERATURE RISE(BY RESISTANCE)	80 ℃
10. FULL LOAD SPEED	1760 RPM
11. FULL LOAD CURRENT	9.3 A
12. LOCKED ROTOR CURRENT	56.8 A
13. MINIMUM STARTING VOLTAGE	342 V
14. EFFICIENCY AT 100% RATED LOAD	83.5 %
15. POWER FACTOR AT 100% RATED LOAD	79.3 %
16. FULL LOAD TORQUE	4.4 KG.M
17. SITE ALTTITUDE(UNDER)	1000 M
18. ENCLOSURE & COOLING METHOD	T E N V
19. TYPE OF BEARING	PL : 6206zz OPL : 6206zz
20. MOUNTING	H O R I Z O N T A L
21. MAXIMUM AMBIENT TEMPURE	40 ℃
22. BEARING LUBRICATION	G R E A S E
23. STARTING METHOD	F U L L V O L T A G E

192.168.11.155 / 2011-06-17 15:51:30

불법복제 및 배포금지

THREE PHASE INDUCTION MOTOR DATE SHEET

SCHEDULE OF TECHNICAL DATA

1. SERVICE	HOISTING
2. MANUFACTURE	극동호이스트 (주)
3. FRAME NUMBER	112 M
4. RATED POWER	3.7 KW x 4 P
5. RATED VOLTAGE AND FREQUENCY	440 V 60 Hz
6. MOTOR TYPE	SQUIRREL CAGE ROTOR TYPE
7. SERVICE FACTOR AND RATTING	1 . 0 , 30 MIN
8. LOCATION AND INSULATION CLASS	INDOOR, OUTDOOR, B CLASS
9. DESIGN TRMPERATURE RISE(BY RESISTANCE)	80 ℃
10. FULL LOAD SPEED	1760 RPM
11. FULL LOAD CURRENT	8.0 A
12. LOCKED ROTOR CURRENT	44.7 A
13. MINIMUM STARTING VOLTAGE	400 V
14. EFFICIENCY AT 100% RATED LOAD	83.5 %
15. POWER FACTOR AT 100% RATED LOAD	79.3 %
16. FULL LOAD TORQUE	4.4 KG.M
17. SITE ALTTITUDE(UNDER)	1000 M
18. ENCLOSURE & COOLING METHOD	T E N V
19. TYPE OF BEARING	PL : 6206zz OPL : 6206zz
20. MOUNTING	H O R I Z O N T A L
21. MAXIMUM AMBIENT TEMPURE	40 ℃
22. BEARING LUBRICATION	G R E A S E
23. STARTING METHOD	F U L L V O L T A G E

192.168.11.155 / 2011-06-17 15:51:30

불법복제 및 배포금지

THREE PHASE INDUCTION MOTOR DATE SHEET

SCHEDULE OF TECHNICAL DATA

1. SERVICE	HOISTING
2. MANUFACTURE	극동호이스트 (주)
3. FRAME NUMBER	112 M
4. RATED POWER	3.7 KW x 4 P
5. RATED VOLTAGE AND FREQUENCY	460 V 60 Hz
6. MOTOR TYPE	SQUIRREL CAGE ROTOR TYPE
7. SERVICE FACTOR AND RATTING	1 . 0 , 30 MIN
8. LOCATION AND INSULATION CLASS	INDOOR, OUTDOOR, B CLASS
9. DESIGN TRMPERATURE RISE(BY RESISTANCE)	80 ℃
10. FULL LOAD SPEED	1760 RPM
11. FULL LOAD CURRENT	8.0 A
12. LOCKED ROTOR CURRENT	44.7 A
13. MINIMUM STARTING VOLTAGE	400 V
14. EFFICIENCY AT 100% RATED LOAD	83.5 %
15. POWER FACTOR AT 100% RATED LOAD	79.3 %
16. FULL LOAD TORQUE	4.4 KG.M
17. SITE ALTTITUDE(UNDER)	1000 M
18. ENCLOSURE & COOLING METHOD	T E N V
19. TYPE OF BEARING	PL : 6206zz OPL : 6206zz
20. MOUNTING	H O R I Z O N T A L
21. MAXIMUM AMBIENT TEMPURE	40 ℃
22. BEARING LUBRICATION	G R E A S E
23. STARTING METHOD	F U L L V O L T A G E

192.168.11.155 / 2011-06-17 15:51:30

불법복제 및 배포금지

THREE PHASE INDUCTION MOTOR DATE SHEET

SCHEDULE OF TECHNICAL DATA

1. SERVICE	HOISTING
2. MANUFACTURE	극동호이스트 (주)
3. FRAME NUMBER	112 M
4. RATED POWER	3.7 KW x 4 P
5. RATED VOLTAGE AND FREQUENCY	480 V 60 Hz
6. MOTOR TYPE	SQUIRREL CAGE ROTOR TYPE
7. SERVICE FACTOR AND RATTING	1 . 0 , 30 MIN
8. LOCATION AND INSULATION CLASS	INDOOR, OUTDOOR, B CLASS
9. DESIGN TRMPERATURE RISE(BY RESISTANCE)	80 ℃
10. FULL LOAD SPEED	1760 RPM
11. FULL LOAD CURRENT	8.0 A
12. LOCKED ROTOR CURRENT	44.7 A
13. MINIMUM STARTING VOLTAGE	400 V
14. EFFICIENCY AT 100% RATED LOAD	83.5 %
15. POWER FACTOR AT 100% RATED LOAD	79.3 %
16. FULL LOAD TORQUE	4.4 KG.M
17. SITE ALTTITUDE(UNDER)	1000 M
18. ENCLOSURE & COOLING METHOD	T E N V
19. TYPE OF BEARING	PL : 6206zz OPL : 6206zz
20. MOUNTING	H O R I Z O N T A L
21. MAXIMUM AMBIENT TEMPURE	40 ℃
22. BEARING LUBRICATION	G R E A S E
23. STARTING METHOD	F U L L V O L T A G E

192.168.11.155 / 2011-06-17 15:51:30

불법복제 및 배포금지

THREE PHASE INDUCTION MOTOR DATE SHEET

SCHEDULE OF TECHNICAL DATA

1. SERVICE	CREEP HOISTING
2. MANUFACTURE	극동호이스트 (주)
3. FRAME NUMBER	80
4. RATED POWER	0.4 KW x 4 P
5. RATED VOLTAGE AND FREQUENCY	220 V 60 Hz
6. MOTOR TYPE	SQUIRREL CAGE ROTOR TYPE
7. SERVICE FACTOR AND RATTING	1 . 0 , 30 MIN
8. LOCATION AND INSULATION CLASS	INDOOR, OUTDOOR, B CLASS
9. DESIGN TRMPERATURE RISE(BY RESISTANCE)	80 ℃
10. FULL LOAD SPEED	1740 RPM
11. FULL LOAD CURRENT	2.7 A
12. LOCKED ROTOR CURRENT	14.2 A
13. MINIMUM STARTING VOLTAGE	200 V
14. EFFICIENCY AT 100% RATED LOAD	63.5 %
15. POWER FACTOR AT 100% RATED LOAD	61.5 %
16. FULL LOAD TORQUE	0.7 KG.M
17. SITE ALTTITUDE(UNDER)	1000 M
18. ENCLOSURE & COOLING METHOD	T E N V
19. TYPE OF BEARING	PL : 6205zz OPL : 6204zz
20. MOUNTING	H O R I Z O N T A L
21. MAXIMUM AMBIENT TEMPURE	40 ℃
22. BEARING LUBRICATION	G R E A S E
23. STARTING METHOD	F U L L V O L T A G E

192.168.11.155 / 2011-06-17 15:51:30

불법복제 및 배포금지

THREE PHASE INDUCTION MOTOR DATE SHEET

SCHEDULE OF TECHNICAL DATA

1. SERVICE	CREEP HOISTING
2. MANUFACTURE	극동호이스트 (주)
3. FRAME NUMBER	80
4. RATED POWER	0.4 KW x 4 P
5. RATED VOLTAGE AND FREQUENCY	380 V 60 Hz
6. MOTOR TYPE	SQUIRREL CAGE ROTOR TYPE
7. SERVICE FACTOR AND RATTING	1 . 0 , 30 MIN
8. LOCATION AND INSULATION CLASS	INDOOR, OUTDOOR, B CLASS
9. DESIGN TRMPERATURE RISE(BY RESISTANCE)	80 ℃
10. FULL LOAD SPEED	1740 RPM
11. FULL LOAD CURRENT	1.6 A
12. LOCKED ROTOR CURRENT	8.3 A
13. MINIMUM STARTING VOLTAGE	345 V
14. EFFICIENCY AT 100% RATED LOAD	63.5 %
15. POWER FACTOR AT 100% RATED LOAD	61.5 %
16. FULL LOAD TORQUE	0.7 KG.M
17. SITE ALTTITUDE(UNDER)	1000 M
18. ENCLOSURE & COOLING METHOD	T E N V
19. TYPE OF BEARING	PL : 6205zz OPL : 6204zz
20. MOUNTING	H O R I Z O N T A L
21. MAXIMUM AMBIENT TEMPURE	40 ℃
22. BEARING LUBRICATION	G R E A S E
23. STARTING METHOD	F U L L V O L T A G E

192.168.11.155 / 2011-06-17 15:51:30

불법복제 및 배포금지

THREE PHASE INDUCTION MOTOR DATE SHEET

SCHEDULE OF TECHNICAL DATA

1. SERVICE	CREEP HOISTING
2. MANUFACTURE	극동호이스트 (주)
3. FRAME NUMBER	80
4. RATED POWER	0.4 KW x 4 P
5. RATED VOLTAGE AND FREQUENCY	440 V 60 Hz
6. MOTOR TYPE	SQUIRREL CAGE ROTOR TYPE
7. SERVICE FACTOR AND RATTING	1 . 0 , 30 MIN
8. LOCATION AND INSULATION CLASS	INDOOR, OUTDOOR, B CLASS
9. DESIGN TRMPERATURE RISE(BY RESISTANCE)	80 ℃
10. FULL LOAD SPEED	1740 RPM
11. FULL LOAD CURRENT	1.4 A
12. LOCKED ROTOR CURRENT	7.1 A
13. MINIMUM STARTING VOLTAGE	400 V
14. EFFICIENCY AT 100% RATED LOAD	63.5 %
15. POWER FACTOR AT 100% RATED LOAD	61.5 %
16. FULL LOAD TORQUE	0.7 KG.M
17. SITE ALTTITUDE(UNDER)	1000 M
18. ENCLOSURE & COOLING METHOD	T E N V
19. TYPE OF BEARING	PL : 6205zz OPL : 6204zz
20. MOUNTING	H O R I Z O N T A L
21. MAXIMUM AMBIENT TEMPURE	40 ℃
22. BEARING LUBRICATION	G R E A S E
23. STARTING METHOD	F U L L V O L T A G E

192.168.11.155 / 2011-06-17 15:51:30

불법복제 및 배포금지

THREE PHASE INDUCTION MOTOR DATE SHEET

SCHEDULE OF TECHNICAL DATA

1. SERVICE	CREEP HOISTING
2. MANUFACTURE	극동호이스트 (주)
3. FRAME NUMBER	80
4. RATED POWER	0.4 KW x 4 P
5. RATED VOLTAGE AND FREQUENCY	460 V 60 Hz
6. MOTOR TYPE	SQUIRREL CAGE ROTOR TYPE
7. SERVICE FACTOR AND RATTING	1 . 0 , 30 MIN
8. LOCATION AND INSULATION CLASS	INDOOR, OUTDOOR, B CLASS
9. DESIGN TRMPERATURE RISE(BY RESISTANCE)	80 ℃
10. FULL LOAD SPEED	1740 RPM
11. FULL LOAD CURRENT	1.3 A
12. LOCKED ROTOR CURRENT	6.8 A
13. MINIMUM STARTING VOLTAGE	418 V
14. EFFICIENCY AT 100% RATED LOAD	63.5 %
15. POWER FACTOR AT 100% RATED LOAD	61.5 %
16. FULL LOAD TORQUE	0.7 KG.M
17. SITE ALTTITUDE(UNDER)	1000 M
18. ENCLOSURE & COOLING METHOD	T E N V
19. TYPE OF BEARING	PL : 6205zz OPL : 6204zz
20. MOUNTING	H O R I Z O N T A L
21. MAXIMUM AMBIENT TEMPURE	40 ℃
22. BEARING LUBRICATION	G R E A S E
23. STARTING METHOD	F U L L V O L T A G E

192.168.11.155 / 2011-06-17 15:51:30

불법복제 및 배포금지

THREE PHASE INDUCTION MOTOR DATE SHEET

SCHEDULE OF TECHNICAL DATA

1. SERVICE	CREEP HOISTING
2. MANUFACTURE	극동호이스트 (주)
3. FRAME NUMBER	80
4. RATED POWER	0.4 KW x 4 P
5. RATED VOLTAGE AND FREQUENCY	480 V 60 Hz
6. MOTOR TYPE	SQUIRREL CAGE ROTOR TYPE
7. SERVICE FACTOR AND RATTING	1 . 0 , 30 MIN
8. LOCATION AND INSULATION CLASS	INDOOR, OUTDOOR, B CLASS
9. DESIGN TRMPERATURE RISE(BY RESISTANCE)	80 ℃
10. FULL LOAD SPEED	1740 RPM
11. FULL LOAD CURRENT	1.2 A
12. LOCKED ROTOR CURRENT	6.6 A
13. MINIMUM STARTING VOLTAGE	436 V
14. EFFICIENCY AT 100% RATED LOAD	63.5 %
15. POWER FACTOR AT 100% RATED LOAD	61.5 %
16. FULL LOAD TORQUE	0.7 KG.M
17. SITE ALTTITUDE(UNDER)	1000 M
18. ENCLOSURE & COOLING METHOD	T E N V
19. TYPE OF BEARING	PL : 6205zz OPL : 6204zz
20. MOUNTING	H O R I Z O N T A L
21. MAXIMUM AMBIENT TEMPURE	40 ℃
22. BEARING LUBRICATION	G R E A S E
23. STARTING METHOD	F U L L V O L T A G E

192.168.11.155 / 2011-06-17 15:51:30

THREE PHASE INDUCTION MOTOR DATE SHEET

SCHEDULE OF TECHNICAL DATA

1. SERVICE	TRAVERSING
2. MANUFACTURE	극동호이스트(주)
3. FRAME NUMBER	90 S
4. RATED POWER	0.75 KW x 4 P
5. RATED VOLTAGE AND FREQUENCY	220 V 60 Hz
6. MOTOR TYPE	SQUIRREL CAGE ROTOR TYPE
7. SERVICE FACTOR AND RATTING	1 . 0 , 30 MIN
8. LOCATION AND INSULATION CLASS	INDOOR, OUTDOOR, B CLASS
9. DESIGN TRMPERATURE RISE(BY RESISTANCE)	80 ℃
10. FULL LOAD SPEED	1764 RPM
11. FULL LOAD CURRENT	4.1 A
12. LOCKED ROTOR CURRENT	23.5 A
13. MINIMUM STARTING VOLTAGE	200 V
14. EFFICIENCY AT 100% RATED LOAD	67 %
15. POWER FACTOR AT 100% RATED LOAD	69.5 %
16. FULL LOAD TORQUE	0.85 KG.M
17. SITE ALTTITUDE(UNDER)	1000 M
18. ENCLOSURE & COOLING METHOD	T E F C
19. TYPE OF BEARING	PL : 6205zz OPL : 6204zz
20. MOUNTING	H O R I Z O N T A L
21. MAXIMUM AMBIENT TEMPURE	40 ℃
22. BEARING LUBRICATION	G R E A S E
23. STARTING METHOD	F U L L V O L T A G E

THREE PHASE INDUCTION MOTOR DATE SHEET

SCHEDULE OF TECHNICAL DATA

1. SERVICE	TRAVERSING
2. MANUFACTURE	극동호이스트(주)
3. FRAME NUMBER	90 S
4. RATED POWER	0.75 KW x 4 P
5. RATED VOLTAGE AND FREQUENCY	380 V 60 Hz
6. MOTOR TYPE	SQUIRREL CAGE ROTOR TYPE
7. SERVICE FACTOR AND RATTING	1 . 0 , 30 MIN
8. LOCATION AND INSULATION CLASS	INDOOR, OUTDOOR, B CLASS
9. DESIGN TRMPERATURE RISE(BY RESISTANCE)	80 ℃
10. FULL LOAD SPEED	1764 RPM
11. FULL LOAD CURRENT	2.45 A
12. LOCKED ROTOR CURRENT	13.5 A
13. MINIMUM STARTING VOLTAGE	342 V
14. EFFICIENCY AT 100% RATED LOAD	67 %
15. POWER FACTOR AT 100% RATED LOAD	69.5 %
16. FULL LOAD TORQUE	0.85 KG.M
17. SITE ALTTITUDE(UNDER)	1000 M
18. ENCLOSURE & COOLING METHOD	T E F C
19. TYPE OF BEARING	PL : 6205zz OPL : 6204zz
20. MOUNTING	H O R I Z O N T A L
21. MAXIMUM AMBIENT TEMPURE	40 ℃
22. BEARING LUBRICATION	G R E A S E
23. STARTING METHOD	F U L L V O L T A G E

THREE PHASE INDUCTION MOTOR DATE SHEET

SCHEDULE OF TECHNICAL DATA

1. SERVICE	TRAVERSING
2. MANUFACTURE	극동호이스트(주)
3. FRAME NUMBER	90 S
4. RATED POWER	0.75 KW x 4 P
5. RATED VOLTAGE AND FREQUENCY	440 V 60 Hz
6. MOTOR TYPE	SQUIRREL CAGE ROTOR TYPE
7. SERVICE FACTOR AND RATTING	1 . 0 , 30 MIN
8. LOCATION AND INSULATION CLASS	INDOOR, OUTDOOR, B CLASS
9. DESIGN TRMPERATURE RISE(BY RESISTANCE)	80 ℃
10. FULL LOAD SPEED	1764 RPM
11. FULL LOAD CURRENT	2.1 A
12. LOCKED ROTOR CURRENT	13.5 A
13. MINIMUM STARTING VOLTAGE	400 V
14. EFFICIENCY AT 100% RATED LOAD	67 %
15. POWER FACTOR AT 100% RATED LOAD	69.5 %
16. FULL LOAD TORQUE	0.85 KG.M
17. SITE ALTTITUDE(UNDER)	1000 M
18. ENCLOSURE & COOLING METHOD	T E F C
19. TYPE OF BEARING	PL : 6205zz OPL : 6204zz
20. MOUNTING	H O R I Z O N T A L
21. MAXIMUM AMBIENT TEMPURE	40 ℃
22. BEARING LUBRICATION	G R E A S E
23. STARTING METHOD	F U L L V O L T A G E

THREE PHASE INDUCTION MOTOR DATE SHEET

SCHEDULE OF TECHNICAL DATA

1. SERVICE	TRAVERSING
2. MANUFACTURE	극동호이스트(주)
3. FRAME NUMBER	90 S
4. RATED POWER	0.75 KW x 4 P
5. RATED VOLTAGE AND FREQUENCY	460 V 60 Hz
6. MOTOR TYPE	SQUIRREL CAGE ROTOR TYPE
7. SERVICE FACTOR AND RATTING	1.0 , 30 MIN
8. LOCATION AND INSULATION CLASS	INDOOR, OUTDOOR, B CLASS
9. DESIGN TRMPERATURE RISE(BY RESISTANCE)	80 ℃
10. FULL LOAD SPEED	1764 RPM
11. FULL LOAD CURRENT	2.1 A
12. LOCKED ROTOR CURRENT	13.5 A
13. MINIMUM STARTING VOLTAGE	416 V
14. EFFICIENCY AT 100% RATED LOAD	67 %
15. POWER FACTOR AT 100% RATED LOAD	69.5 %
16. FULL LOAD TORQUE	0.85 KG.M
17. SITE ALTTITUDE(UNDER)	1000 M
18. ENCLOSURE & COOLING METHOD	T E F C
19. TYPE OF BEARING	PL : 6205zz OPL : 6204zz
20. MOUNTING	H O R I Z O N T A L
21. MAXIMUM AMBIENT TEMPURE	40 ℃
22. BEARING LUBRICATION	G R E A S E
23. STARTING METHOD	F U L L V O L T A G E

THREE PHASE INDUCTION MOTOR DATE SHEET

SCHEDULE OF TECHNICAL DATA

1. SERVICE	TRAVERSING
2. MANUFACTURE	극동호이스트(주)
3. FRAME NUMBER	90 S
4. RATED POWER	0.75 KW x 4 P
5. RATED VOLTAGE AND FREQUENCY	480 V 60 Hz
6. MOTOR TYPE	SQUIRREL CAGE ROTOR TYPE
7. SERVICE FACTOR AND RATTING	1 . 0 , 30 MIN
8. LOCATION AND INSULATION CLASS	INDOOR, OUTDOOR, B CLASS
9. DESIGN TRMPERATURE RISE(BY RESISTANCE)	80 ℃
10. FULL LOAD SPEED	1764 RPM
11. FULL LOAD CURRENT	2.1 A
12. LOCKED ROTOR CURRENT	13.5 A
13. MINIMUM STARTING VOLTAGE	432 V
14. EFFICIENCY AT 100% RATED LOAD	67 %
15. POWER FACTOR AT 100% RATED LOAD	69.5 %
16. FULL LOAD TORQUE	0.85 KG.M
17. SITE ALTTITUDE(UNDER)	1000 M
18. ENCLOSURE & COOLING METHOD	T E F C
19. TYPE OF BEARING	PL : 6205zz OPL : 6204zz
20. MOUNTING	H O R I Z O N T A L
21. MAXIMUM AMBIENT TEMPURE	40 ℃
22. BEARING LUBRICATION	G R E A S E
23. STARTING METHOD	F U L L V O L T A G E

THREE PHASE INDUCTION MOTOR DATE SHEET

SCHEDULE OF TECHNICAL DATA

1. SERVICE	TRAVERSING
2. MANUFACTURE	극동호이스트(주)
3. FRAME NUMBER	90 S
4. RATED POWER	0.5 KW x 6 P
5. RATED VOLTAGE AND FREQUENCY	220 V 60 Hz
6. MOTOR TYPE	SQUIRREL CAGE ROTOR TYPE
7. SERVICE FACTOR AND RATTING	1 . 0 , 30 MIN
8. LOCATION AND INSULATION CLASS	INDOOR, OUTDOOR, B CLASS
9. DESIGN TRMPERATURE RISE(BY RESISTANCE)	80 ℃
10. FULL LOAD SPEED	1176 RPM
11. FULL LOAD CURRENT	3.4 A
12. LOCKED ROTOR CURRENT	16.4 A
13. MINIMUM STARTING VOLTAGE	200 V
14. EFFICIENCY AT 100% RATED LOAD	64 %
15. POWER FACTOR AT 100% RATED LOAD	59.5 %
16. FULL LOAD TORQUE	0.80 KG.M
17. SITE ALTTITUDE(UNDER)	1000 M
18. ENCLOSURE & COOLING METHOD	T E N V
19. TYPE OF BEARING	PL : 6205zz OPL : 6204zz
20. MOUNTING	H O R I Z O N T A L
21. MAXIMUM AMBIENT TEMPURE	40 ℃
22. BEARING LUBRICATION	G R E A S E
23. STARTING METHOD	F U L L V O L T A G E

THREE PHASE INDUCTION MOTOR DATE SHEET

SCHEDULE OF TECHNICAL DATA

1. SERVICE	TRAVERSING
2. MANUFACTURE	극동호이스트(주)
3. FRAME NUMBER	90 S
4. RATED POWER	0.5 KW x 6 P
5. RATED VOLTAGE AND FREQUENCY	380 V 60 Hz
6. MOTOR TYPE	SQUIRREL CAGE ROTOR TYPE
7. SERVICE FACTOR AND RATTING	1 . 0 , 30 MIN
8. LOCATION AND INSULATION CLASS	INDOOR, OUTDOOR, B CLASS
9. DESIGN TRMPERATURE RISE(BY RESISTANCE)	80 ℃
10. FULL LOAD SPEED	1176 RPM
11. FULL LOAD CURRENT	2.0 A
12. LOCKED ROTOR CURRENT	9.5 A
13. MINIMUM STARTING VOLTAGE	345 V
14. EFFICIENCY AT 100% RATED LOAD	64 %
15. POWER FACTOR AT 100% RATED LOAD	59.5 %
16. FULL LOAD TORQUE	0.80 KG.M
17. SITE ALTTITUDE(UNDER)	1000 M
18. ENCLOSURE & COOLING METHOD	T E N V
19. TYPE OF BEARING	PL : 6205zz OPL : 6204zz
20. MOUNTING	H O R I Z O N T A L
21. MAXIMUM AMBIENT TEMPURE	40 ℃
22. BEARING LUBRICATION	G R E A S E
23. STARTING METHOD	F U L L V O L T A G E

THREE PHASE INDUCTION MOTOR DATE SHEET

SCHEDULE OF TECHNICAL DATA

1. SERVICE	TRAVERSING
2. MANUFACTURE	극동호이스트(주)
3. FRAME NUMBER	90 S
4. RATED POWER	0.5 KW x 6 P
5. RATED VOLTAGE AND FREQUENCY	440 V 60 Hz
6. MOTOR TYPE	SQUIRREL CAGE ROTOR TYPE
7. SERVICE FACTOR AND RATTING	1 . 0 , 30 MIN
8. LOCATION AND INSULATION CLASS	INDOOR, OUTDOOR, B CLASS
9. DESIGN TRMPERATURE RISE(BY RESISTANCE)	80 ℃
10. FULL LOAD SPEED	1176 RPM
11. FULL LOAD CURRENT	1.7 A
12. LOCKED ROTOR CURRENT	8.2 A
13. MINIMUM STARTING VOLTAGE	400 V
14. EFFICIENCY AT 100% RATED LOAD	64 %
15. POWER FACTOR AT 100% RATED LOAD	59.5 %
16. FULL LOAD TORQUE	0.80 KG.M
17. SITE ALTTITUDE(UNDER)	1000 M
18. ENCLOSURE & COOLING METHOD	T E N V
19. TYPE OF BEARING	PL : 6205zz OPL : 6204zz
20. MOUNTING	H O R I Z O N T A L
21. MAXIMUM AMBIENT TEMPURE	40 ℃
22. BEARING LUBRICATION	G R E A S E
23. STARTING METHOD	F U L L V O L T A G E

THREE PHASE INDUCTION MOTOR DATE SHEET

SCHEDULE OF TECHNICAL DATA

1. SERVICE	TRAVERSING
2. MANUFACTURE	극동호이스트(주)
3. FRAME NUMBER	90 S
4. RATED POWER	0.5 KW x 6 P
5. RATED VOLTAGE AND FREQUENCY	460 V 60 Hz
6. MOTOR TYPE	SQUIRREL CAGE ROTOR TYPE
7. SERVICE FACTOR AND RATTING	1 . 0 , 30 MIN
8. LOCATION AND INSULATION CLASS	INDOOR, OUTDOOR, B CLASS
9. DESIGN TRMPERATURE RISE(BY RESISTANCE)	80 ℃
10. FULL LOAD SPEED	1176 RPM
11. FULL LOAD CURRENT	1.7 A
12. LOCKED ROTOR CURRENT	7.9 A
13. MINIMUM STARTING VOLTAGE	418 V
14. EFFICIENCY AT 100% RATED LOAD	64 %
15. POWER FACTOR AT 100% RATED LOAD	59.5 %
16. FULL LOAD TORQUE	0.80 KG.M
17. SITE ALTTITUDE(UNDER)	1000 M
18. ENCLOSURE & COOLING METHOD	T E N V
19. TYPE OF BEARING	PL : 6205zz OPL : 6204zz
20. MOUNTING	H O R I Z O N T A L
21. MAXIMUM AMBIENT TEMPURE	40 ℃
22. BEARING LUBRICATION	G R E A S E
23. STARTING METHOD	F U L L V O L T A G E

THREE PHASE INDUCTION MOTOR DATE SHEET

SCHEDULE OF TECHNICAL DATA

1. SERVICE	TRAVERSING
2. MANUFACTURE	극동호이스트(주)
3. FRAME NUMBER	90 S
4. RATED POWER	0.5 KW x 6 P
5. RATED VOLTAGE AND FREQUENCY	480 V 60 Hz
6. MOTOR TYPE	SQUIRREL CAGE ROTOR TYPE
7. SERVICE FACTOR AND RATTING	1.0 , 30 MIN
8. LOCATION AND INSULATION CLASS	INDOOR, OUTDOOR, B CLASS
9. DESIGN TRMPERATURE RISE(BY RESISTANCE)	80 ℃
10. FULL LOAD SPEED	1176 RPM
11. FULL LOAD CURRENT	1.6 A
12. LOCKED ROTOR CURRENT	7.5 A
13. MINIMUM STARTING VOLTAGE	436 V
14. EFFICIENCY AT 100% RATED LOAD	64 %
15. POWER FACTOR AT 100% RATED LOAD	59.5 %
16. FULL LOAD TORQUE	0.80 KG.M
17. SITE ALTTITUDE(UNDER)	1000 M
18. ENCLOSURE & COOLING METHOD	T E N V
19. TYPE OF BEARING	PL : 6205zz OPL : 6204zz
20. MOUNTING	H O R I Z O N T A L
21. MAXIMUM AMBIENT TEMPURE	40 ℃
22. BEARING LUBRICATION	G R E A S E
23. STARTING METHOD	F U L L V O L T A G E

THREE PHASE INDUCTION MOTOR DATE SHEET

SCHEDULE OF TECHNICAL DATA

1. SERVICE	TRAVERSING
2. MANUFACTURE	극동호이스트 (주)
3. FRAME NUMBER	90 L
4. RATED POWER	0.8/0.4 KW x 4/8 P
5. RATED VOLTAGE AND FREQUENCY	220 V 60 Hz
6. MOTOR TYPE	SQUIRREL CAGE ROTOR TYPE
7. SERVICE FACTOR AND RATTING	1.0 , 30 MIN
8. LOCATION AND INSULATION CLASS	INDOOR, OUTDOOR, B CLASS
9. DESIGN TRMPERATURE RISE(BY RESISTANCE)	80 ℃
10. FULL LOAD SPEED	1750 / 850 RPM
11. FULL LOAD CURRENT	4.8/4.25 A
12. LOCKED ROTOR CURRENT	14.2/13.6 A
13. MINIMUM STARTING VOLTAGE	200 V
14. EFFICIENCY AT 100% RATED LOAD	72.8/65.8 %
15. POWER FACTOR AT 100% RATED LOAD	82.3/75 %
16. FULL LOAD TORQUE	0.80 KG.M
17. SITE ALTTITUDE(UNDER)	1000 M
18. ENCLOSURE & COOLING METHOD	T E N V
19. TYPE OF BEARING	PL : 6205zz OPL : 6204zz
20. MOUNTING	H O R I Z O N T A L
21. MAXIMUM AMBIENT TEMPURE	40 ℃
22. BEARING LUBRICATION	G R E A S E
23. STARTING METHOD	F U L L V O L T A G E

THREE PHASE INDUCTION MOTOR DATE SHEET

SCHEDULE OF TECHNICAL DATA

1. SERVICE	TRAVERSING
2. MANUFACTURE	극동호이스트 (주)
3. FRAME NUMBER	90 L
4. RATED POWER	0.8/0.4 KW x 4/8 P
5. RATED VOLTAGE AND FREQUENCY	380 V 60 Hz
6. MOTOR TYPE	SQUIRREL CAGE ROTOR TYPE
7. SERVICE FACTOR AND RATTING	1 . 0 , 30 MIN
8. LOCATION AND INSULATION CLASS	INDOOR, OUTDOOR, B CLASS
9. DESIGN TRMPERATURE RISE(BY RESISTANCE)	80 ℃
10. FULL LOAD SPEED	1750 / 850 RPM
11. FULL LOAD CURRENT	2.78/2.63 A
12. LOCKED ROTOR CURRENT	9.2/6.3 A
13. MINIMUM STARTING VOLTAGE	345 V
14. EFFICIENCY AT 100% RATED LOAD	72.8/65.8 %
15. POWER FACTOR AT 100% RATED LOAD	82.3/75 %
16. FULL LOAD TORQUE	0.80 KG.M
17. SITE ALTTITUDE(UNDER)	1000 M
18. ENCLOSURE & COOLING METHOD	T E N V
19. TYPE OF BEARING	PL : 6205zz OPL : 6204zz
20. MOUNTING	H O R I Z O N T A L
21. MAXIMUM AMBIENT TEMPURE	40 ℃
22. BEARING LUBRICATION	G R E A S E
23. STARTING METHOD	F U L L V O L T A G E

THREE PHASE INDUCTION MOTOR DATE SHEET

SCHEDULE OF TECHNICAL DATA

1. SERVICE	TRAVERSING
2. MANUFACTURE	극동호이스트 (주)
3. FRAME NUMBER	90 L
4. RATED POWER	0.8/0.4 KW x 4/8 P
5. RATED VOLTAGE AND FREQUENCY	440 V 60 Hz
6. MOTOR TYPE	SQUIRREL CAGE ROTOR TYPE
7. SERVICE FACTOR AND RATTING	1 . 0 , 30 MIN
8. LOCATION AND INSULATION CLASS	INDOOR, OUTDOOR, B CLASS
9. DESIGN TRMPERATURE RISE(BY RESISTANCE)	80 ℃
10. FULL LOAD SPEED	1750 / 850 RPM
11. FULL LOAD CURRENT	2.4/2.27 A
12. LOCKED ROTOR CURRENT	8.6/6.21 A
13. MINIMUM STARTING VOLTAGE	400 V
14. EFFICIENCY AT 100% RATED LOAD	72.8/65.8 %
15. POWER FACTOR AT 100% RATED LOAD	82.3/75 %
16. FULL LOAD TORQUE	0.80 KG.M
17. SITE ALTTITUDE(UNDER)	1000 M
18. ENCLOSURE & COOLING METHOD	T E N V
19. TYPE OF BEARING	PL : 6205zz OPL : 6204zz
20. MOUNTING	H O R I Z O N T A L
21. MAXIMUM AMBIENT TEMPURE	40 ℃
22. BEARING LUBRICATION	G R E A S E
23. STARTING METHOD	F U L L V O L T A G E

THREE PHASE INDUCTION MOTOR DATE SHEET

SCHEDULE OF TECHNICAL DATA

1. SERVICE	TRAVERSING
2. MANUFACTURE	극동호이스트 (주)
3. FRAME NUMBER	90 L
4. RATED POWER	0.8/0.4 KW x 4/8 P
5. RATED VOLTAGE AND FREQUENCY	460 V 60 Hz
6. MOTOR TYPE	SQUIRREL CAGE ROTOR TYPE
7. SERVICE FACTOR AND RATTING	1 . 0 , 30 MIN
8. LOCATION AND INSULATION CLASS	INDOOR, OUTDOOR, B CLASS
9. DESIGN TRMPERATURE RISE(BY RESISTANCE)	80 ℃
10. FULL LOAD SPEED	1750 / 850 RPM
11. FULL LOAD CURRENT	2.3/2.17 A
12. LOCKED ROTOR CURRENT	8.5/6.18 A
13. MINIMUM STARTING VOLTAGE	418 V
14. EFFICIENCY AT 100% RATED LOAD	72.8/65.8 %
15. POWER FACTOR AT 100% RATED LOAD	82.3/75 %
16. FULL LOAD TORQUE	0.80 KG.M
17. SITE ALTTITUDE(UNDER)	1000 M
18. ENCLOSURE & COOLING METHOD	T E N V
19. TYPE OF BEARING	PL : 6205zz OPL : 6204zz
20. MOUNTING	H O R I Z O N T A L
21. MAXIMUM AMBIENT TEMPURE	40 ℃
22. BEARING LUBRICATION	G R E A S E
23. STARTING METHOD	F U L L V O L T A G E

THREE PHASE INDUCTION MOTOR DATE SHEET

SCHEDULE OF TECHNICAL DATA

1. SERVICE	TRAVERSING
2. MANUFACTURE	극동호이스트 (주)
3. FRAME NUMBER	90 L
4. RATED POWER	0.8/0.4 KW x 4/8 P
5. RATED VOLTAGE AND FREQUENCY	480 V 60 Hz
6. MOTOR TYPE	SQUIRREL CAGE ROTOR TYPE
7. SERVICE FACTOR AND RATTING	1 . 0 , 30 MIN
8. LOCATION AND INSULATION CLASS	INDOOR, OUTDOOR, B CLASS
9. DESIGN TRMPERATURE RISE(BY RESISTANCE)	80 ℃
10. FULL LOAD SPEED	1750 / 850 RPM
11. FULL LOAD CURRENT	2.3/2.1 A
12. LOCKED ROTOR CURRENT	8.4/6.15 A
13. MINIMUM STARTING VOLTAGE	436 V
14. EFFICIENCY AT 100% RATED LOAD	72.8/65.8 %
15. POWER FACTOR AT 100% RATED LOAD	82.3/75 %
16. FULL LOAD TORQUE	0.80 KG.M
17. SITE ALTTITUDE(UNDER)	1000 M
18. ENCLOSURE & COOLING METHOD	T E N V
19. TYPE OF BEARING	PL : 6205zz OPL : 6204zz
20. MOUNTING	H O R I Z O N T A L
21. MAXIMUM AMBIENT TEMPURE	40 ℃
22. BEARING LUBRICATION	G R E A S E
23. STARTING METHOD	F U L L V O L T A G E

THREE PHASE INDUCTION MOTOR DATE SHEET

SCHEDULE OF TECHNICAL DATA

1. SERVICE	TRAVERSING
2. MANUFACTURE	극동호이스트 (주)
3. FRAME NUMBER	90 L
4. RATED POWER	0.5/0.25 KW x 6/12 P
5. RATED VOLTAGE AND FREQUENCY	220 V 60 Hz
6. MOTOR TYPE	SQUIRREL CAGE ROTOR TYPE
7. SERVICE FACTOR AND RATTING	1 . 0 , 30 MIN
8. LOCATION AND INSULATION CLASS	INDOOR, OUTDOOR, B CLASS
9. DESIGN TRMPERATURE RISE(BY RESISTANCE)	80 ℃
10. FULL LOAD SPEED	1050 / 460 RPM
11. FULL LOAD CURRENT	3.2/3.6 A
12. LOCKED ROTOR CURRENT	12.8/10.8 A
13. MINIMUM STARTING VOLTAGE	200 V
14. EFFICIENCY AT 100% RATED LOAD	57.5/35.0 %
15. POWER FACTOR AT 100% RATED LOAD	64.5/50.0 %
16. FULL LOAD TORQUE	0.757/0.506 KG.M
17. SITE ALTTITUDE(UNDER)	1000 M
18. ENCLOSURE & COOLING METHOD	T E N V
19. TYPE OF BEARING	PL : 6205zz OPL : 6204zz
20. MOUNTING	H O R I Z O N T A L
21. MAXIMUM AMBIENT TEMPURE	40 ℃
22. BEARING LUBRICATION	G R E A S E
23. STARTING METHOD	F U L L V O L T A G E

THREE PHASE INDUCTION MOTOR DATE SHEET

SCHEDULE OF TECHNICAL DATA

1. SERVICE	TRAVERSING
2. MANUFACTURE	극동호이스트 (주)
3. FRAME NUMBER	90 L
4. RATED POWER	0.5/0.25 KW x 6/12 P
5. RATED VOLTAGE AND FREQUENCY	380 V 60 Hz
6. MOTOR TYPE	SQUIRREL CAGE ROTOR TYPE
7. SERVICE FACTOR AND RATTING	1 . 0 , 30 MIN
8. LOCATION AND INSULATION CLASS	INDOOR, OUTDOOR, B CLASS
9. DESIGN TRMPERATURE RISE(BY RESISTANCE)	80 ℃
10. FULL LOAD SPEED	1050 / 460 RPM
11. FULL LOAD CURRENT	1.85/2.08 A
12. LOCKED ROTOR CURRENT	7.41/6.25 A
13. MINIMUM STARTING VOLTAGE	345 V
14. EFFICIENCY AT 100% RATED LOAD	57.5/35.0 %
15. POWER FACTOR AT 100% RATED LOAD	64.5/50.0 %
16. FULL LOAD TORQUE	0.757/0.506 KG.M
17. SITE ALTTITUDE(UNDER)	1000 M
18. ENCLOSURE & COOLING METHOD	T E N V
19. TYPE OF BEARING	PL : 6205zz OPL : 6204zz
20. MOUNTING	H O R I Z O N T A L
21. MAXIMUM AMBIENT TEMPURE	40 ℃
22. BEARING LUBRICATION	G R E A S E
23. STARTING METHOD	F U L L V O L T A G E

THREE PHASE INDUCTION MOTOR DATE SHEET

SCHEDULE OF TECHNICAL DATA

1. SERVICE	TRAVERSING
2. MANUFACTURE	극동호이스트 (주)
3. FRAME NUMBER	90 L
4. RATED POWER	0.5/0.25 KW x 6/12 P
5. RATED VOLTAGE AND FREQUENCY	440 V 60 Hz
6. MOTOR TYPE	SQUIRREL CAGE ROTOR TYPE
7. SERVICE FACTOR AND RATTING	1.0 , 30 MIN
8. LOCATION AND INSULATION CLASS	INDOOR, OUTDOOR, B CLASS
9. DESIGN TRMPERATURE RISE(BY RESISTANCE)	80 ℃
10. FULL LOAD SPEED	1050 / 460 RPM
11. FULL LOAD CURRENT	1.6/1.8 A
12. LOCKED ROTOR CURRENT	6.4/5.4 A
13. MINIMUM STARTING VOLTAGE	400 V
14. EFFICIENCY AT 100% RATED LOAD	57.5/3508 %
15. POWER FACTOR AT 100% RATED LOAD	64.5/50.0 %
16. FULL LOAD TORQUE	0.757/0.506 KG.M
17. SITE ALTTITUDE(UNDER)	1000 M
18. ENCLOSURE & COOLING METHOD	T E N V
19. TYPE OF BEARING	PL : 6205zz OPL : 6204zz
20. MOUNTING	H O R I Z O N T A L
21. MAXIMUM AMBIENT TEMPURE	40 ℃
22. BEARING LUBRICATION	G R E A S E
23. STARTING METHOD	F U L L V O L T A G E

THREE PHASE INDUCTION MOTOR DATE SHEET

SCHEDULE OF TECHNICAL DATA

1. SERVICE	TRAVERSING
2. MANUFACTURE	극동호이스트 (주)
3. FRAME NUMBER	90 L
4. RATED POWER	0.5/0.25 KW x 6/12 P
5. RATED VOLTAGE AND FREQUENCY	460 V 60 Hz
6. MOTOR TYPE	SQUIRREL CAGE ROTOR TYPE
7. SERVICE FACTOR AND RATTING	1.0 , 30 MIN
8. LOCATION AND INSULATION CLASS	INDOOR, OUTDOOR, B CLASS
9. DESIGN TRMPERATURE RISE(BY RESISTANCE)	80 ℃
10. FULL LOAD SPEED	1050 / 460 RPM
11. FULL LOAD CURRENT	1.57/1.78 A
12. LOCKED ROTOR CURRENT	6.3/524 A
13. MINIMUM STARTING VOLTAGE	418 V
14. EFFICIENCY AT 100% RATED LOAD	57.5/3508 %
15. POWER FACTOR AT 100% RATED LOAD	64.5/50.0 %
16. FULL LOAD TORQUE	0.757/0.506 KG.M
17. SITE ALTTITUDE(UNDER)	1000 M
18. ENCLOSURE & COOLING METHOD	T E N V
19. TYPE OF BEARING	PL : 6205zz OPL : 6204zz
20. MOUNTING	H O R I Z O N T A L
21. MAXIMUM AMBIENT TEMPURE	40 ℃
22. BEARING LUBRICATION	G R E A S E
23. STARTING METHOD	F U L L V O L T A G E

THREE PHASE INDUCTION MOTOR DATE SHEET

SCHEDULE OF TECHNICAL DATA

1. SERVICE	TRAVERSING
2. MANUFACTURE	극동호이스트 (주)
3. FRAME NUMBER	90 L
4. RATED POWER	0.5/0.25 KW x 6/12 P
5. RATED VOLTAGE AND FREQUENCY	480 V 60 Hz
6. MOTOR TYPE	SQUIRREL CAGE ROTOR TYPE
7. SERVICE FACTOR AND RATTING	1 . 0 , 30 MIN
8. LOCATION AND INSULATION CLASS	INDOOR, OUTDOOR, B CLASS
9. DESIGN TRMPERATURE RISE(BY RESISTANCE)	80 ℃
10. FULL LOAD SPEED	1050 / 460 RPM
11. FULL LOAD CURRENT	1.56/1.76 A
12. LOCKED ROTOR CURRENT	6.2/5.1 A
13. MINIMUM STARTING VOLTAGE	436 V
14. EFFICIENCY AT 100% RATED LOAD	57.5/3508 %
15. POWER FACTOR AT 100% RATED LOAD	64.5/50.0 %
16. FULL LOAD TORQUE	0.757/0.506 KG.M
17. SITE ALTTITUDE(UNDER)	1000 M
18. ENCLOSURE & COOLING METHOD	T E N V
19. TYPE OF BEARING	PL : 6205zz OPL : 6204zz
20. MOUNTING	H O R I Z O N T A L
21. MAXIMUM AMBIENT TEMPURE	40 ℃
22. BEARING LUBRICATION	G R E A S E
23. STARTING METHOD	F U L L V O L T A G E

불법복제 및 배포금지

Manho Rope & Wire Ltd.

Registered by

Manufacture
1080-11,SONGJOUNG-DONG,GANGSEO-KU,
BUSAN,KOREA
TEL : 82-51-831-5811-8
FAX : 82-51-831-5817

KS D 3525 / API 9A / JIS G 3525
AMERICAN BUREAU OF SHIPPING
LLOYD'S REGISTER OF SHIPPING
KOREAN REGISTER OF SHIPPING
DIRECTION NAVAL RUSSIA
DET NORSKE VERITAS
GERMANISCHER LLOYD
RINA REGISTRO ITALIANO NAVALE
[illegible]

Sheet No. 2011B-415-01

Date MAY.31,2011

MILL TEST CERTIFICATE

Customer : Messrs

Supplier : Messrs MANHO ROPE & WIRE LTD.

L/C No. Order No.

Commodity GALVANIZED STEEL WIRE ROPE

Construction 6X19 FC Grade 180 Kg/mm²

Specification KS D3514 Lubrication DRY

Order Quantity 2,000.00 m Reel No. 1

Gross Weight Net Weight 488.00 Kgs

TEST RESULT

Rope Dia 8.00 (Actual) 8.050 mm Performing [illegible]

Kind of Lay R.H.R.L Length of Lay [illegible] mm

Actual Breaking strength of Wire Rope 3,900.00 Kgs

Nominal Dia. of Wire [illegible] mm

Tensile Strength of Wires Min 184 Max 189 Kg / mm²

Number of Torsion of Wires Min 30 Max [illegible] Times

Weight of Zinc Coating 54.300 g / m²

CHEMICAL ANALYSIS OF WIRE ROD

%

Heat No.	C	Si	Mn	P	S
5A18527	0.6282	0.193	0.755	0.0120	0.0071

REMARKS

KS ABS LLOYD'S KR NK DNV GL RINA BV API-9A JIS

Quality Control Dept

MHS-B102-31 Manho Rope & Wire Ltd. (203X280)

192.168.11.155 / 2011-06-17 15:51:30